Stock

McFarlane has over 4,500 cable assemblies and chains in stock. We have FAA-PMA approved cables available in corrosion resistant stainless or high strength galvanized steel for most 100 and 200 series Cessna aircraft, PA28, PA32 and PA34 series Piper aircraft and G-164 series Ag-Cat aircraft. McFarlane also stocks cables for single engine piston and many turbine and twin engine Beechcraft, and stabilator adjust cables for Piper J-3, PA-11,PA-12, PA-14, PA-16, PA-18, PA-18A, PA-20 and PA-22.

Quality

McFarlane aircraft flight control cables offer quality that is second to none in the aircraft industry. Our quality assurance procedures and personnel are relentless, insuring that our aircraft flight control cables meet the highest standards possible. These standards exceed the military specifications that govern aircraft flight control cables.

Each McFarlane cable assembly is made from the highest quality U.S. manufactured materials from suppliers that have been listed by the U.S. government as being tested and qualified for government use (QPL listed). Before cable assemblies are accepted a sample from each lot of cable assemblies is subjected to a test load equal to 100% of their rated minimum breaking strength and then destroyed. Every cable terminal swaged on a cable assembly is inspected for proper dimension. All cable assemblies produced are pre-stretched to eliminate rigging and growth changes after installation. In addition each and every McFarlane cable assembly must endure a sustained proof load equal to 60% of the cable's minimum rated breaking strength assuring the safest and highest quality aircraft flight control cables available.

Custom Cables

Custom cable assemblies can be fabricated and certified to specification MIL-DTL-6117, or certified to your special specifications. McFarlane custom cables with standard fittings are pre stretched and proof loaded in accordance with MIL-DTL-5688. Cables using nonstandard fittings are proof loaded and pre stretched when possible, but cannot be certified to the MIL-DTL-5688 or MIL-DTL-6117 standards.

Traceability of all materials and test reports are maintained for our custom cables. Our extensive stock of cable and fittings allows us to provide one to three day service for most orders. A custom cable design form is available at www.mcfarlaneaviation.com or send us your old cable.

Custom assemblies are manufactured using the same materials and attention to quality as our FAA-PMA products, however, custom cables are not FAA-PMA approved.

Stainless Steel or Galvanized Steel Cable?

Stainless steel is corrosion resistant and works well in environments such as salt air, water saturation, or agricultural chemicals. Galvanized carbon steel and stainless cables are soaked in a MIL-SPEC rust preventative and lubricating compound. In normal environments the galvanized cable will not suffer from corrosion damage for decades.

The advantages of galvanized cable are its wear resistance and cost. Galvanized cable resists abrasion wear four or five times longer than stainless steel.

Stainless steel wire is high in nickel and therefore softer than the carbon steel wire. Stainless steel cable will show signs of wire wear at pulleys and fairleads much quicker than the galvanized carbon steel wire.

We recommend using galvanized steel cables except in coastal geographical areas, agricultural aircraft, float planes, and other applications where the cable is exposed directly to water. ***Only McFarlane has FAA-PMA approved galvanized cables for the new production Cessna aircraft.***

All Beechcraft cables are made from galvanized steel cable and coated with a modified MIL-PRF-16173 compound. This is the same process used on Beechcraft original cables. It provides additional corrosion protection beyond the standard MIL-SPEC rust preventive oil. This provides both exceptional wear resistance and corrosion protection for many years.

Bulk Cable

McFarlane buys certified cable in large quantities direct from the mill. This allows us to provide low prices on bulk cable. McFarlane offers pre-packaged bulk cable in a variety of sizes. Cable can be ordered in 100 ft. or 500 ft. lengths. Certification from the cable manufacturer is given with every order.

Pulleys

McFarlane stocks all pulleys required for Cessna single engine aircraft. Our FAA-PMA approval on pulleys replace the AN, NAS and S series pulleys commonly used on the Cessna aircraft. Pulley kits are available that contain all the pulleys and cotter pins required for one aircraft. See the pulley section on pages 104-105 of the catalog for more details.

Trim Control Chains

McFarlane offers the trim control chains for Cessna single engine and most Beechcraft aircraft. Don't forget to replace your trim control chains and connecting links where necessary!

Hardware

McFarlane stocks an extensive inventory of cable hardware. We offer terminals, turnbuckles, eye ends, sleeves, locking clips, barrels and balls. Let our purchasing volume save you money!

Buy Complete Kits and Save!

McFarlane has complete flight control cable and trim chain kits for each of the different cable groups required to service most single engine aircraft from the Cessna model 120 through model 210 and cable kits for most Piper single engine airplanes. Most of the light aircraft fleet has seen many years of service and have endured many flight hours. Worn, rusty, and frayed cables are now common. It is a tedious, time consuming job to research the part manuals for all of the cables required for a complete aircraft. McFarlane has done the research and has all of the part numbers required for your aircraft.

We stock kits in either galvanized-carbon steel or stainless steel. All components are fully traceable and carry a one year limited warranty.

- **McFarlane quality is second to none!**
- **Cables available in galvanized and stainless steel.**
- **Cables are sold in kits or separately.**
- **When you order cable and cable terminals from McFarlane you will always receive a certified product!**
- **Our large volume purchases give you great prices!**
- **Over 25 years of cable experience!**

We are one of a few DOD QML-6117 certified manufacturers of aircraft cable assemblies!

Flight Control System
Flight Control Cables - Cessna

120 1946-1947[1]
S/N 8004 thru 12890
Complete Cable Kit P/N CCKT120-01G (Galvanized)
Complete Cable Kit P/N CCKT120-01S (Stainless Steel)
Complete Pulley Kit P/N PULL-KT-01*

Qty	P/N	Galv SS	Location
1	MC0400107-5 or 105		Elevator Control Up
1	MC0400107-9 or 109		Elevator Control Down
1	MC0400107-6[2]		Elevator Trim Carry Thru
1	MC0400107-7 or 7S		Elevator Trim Aft
1	MC0400107-8 or 8S		Elevator Trim Forward
2	MC0400107-4 or 104		Rudder Control
2	MC0400107-1 or 1CS		Aileron Direct
1	MC0400107-2 or 2CS		Aileron Carry Thru
2	MCS2295-25-63		Chain Elevator Trim
4	MCS2294-25		Chain Connecting Link

120 1947[1]-1949
S/N 12891 thru 15075
Complete Cable Kit P/N CCKT120-02G (Galvanized)
Complete Cable Kit P/N CCKT120-02S (Stainless Steel)
Complete Pulley Kit P/N PULL-KT-01*

Qty	P/N	Galv SS	Location
1	MC0400107-5 or 105		Elevator Control Up
1	MC0400107-9 or 109		Elevator Control Down
1	MC0400107-7 or 7S		Elevator Trim Aft
1	MC0400107-8 or 8S		Elevator Trim Forward
1	MC0400107-11 or 111		Elev Trim Carry Thru Forward
1	MC0400107-12 or 12S		Elev Trim Carry Thru Aft
2	MC0400107-4 or 104		Rudder Control
2	MC0400107-1 or 1CS		Aileron Direct
1	MC0400107-2 or 2CS		Aileron Carry Thru
2	MCS2295-25-63		Chain Elevator Trim
4	MCS2294-25		Chain Connecting Link

140 1946[1]
S/N 8004 thru 10069
Complete Cable Kit P/N CCKT140-01G (Galvanized)
Complete Cable Kit P/N CCKT140-01S (Stainless Steel)
Complete Pulley Kit P/N PULL-KT-01*

Qty	P/N	Galv SS	Location
1	MC0400107-5 or 105		Elevator Control Up
1	MC0400107-9 or 109		Elevator Control Down
1	MC0400107-6[2]		Elevator Trim Carry Thru
1	MC0400107-7 or 7S		Elevator Trim Aft
1	MC0400107-8 or 8S		Elevator Trim Forward
2	MC0400107-4 or 104		Rudder Control
2	MC0400107-1 or 1CS		Aileron Direct
1	MC0400107-2 or 2CS		Aileron Carry Thru
1	MC0400107-3 or 3		Flap Control
2	MCS2295-25-63		Chain Elevator Trim
4	MCS2294-25		Chain Connecting Link

140 1946[1]-1947[1]
S/N 10070 thru 12890
Complete Cable Kit P/N CCKT140-02G (Galvanized)
Complete Cable Kit P/N CCKT140-02S (Stainless Steel)
Complete Pulley Kit P/N PULL-KT-01*

Qty	P/N	Galv SS	Location
1	MC0400107-5 or 105		Elevator Control Up
1	MC0400107-9 or 109		Elevator Control Down
1	MC0400107-6[2]		Elevator Trim Carry Thru
1	MC0400107-7 or 7S		Elevator Trim Aft
1	MC0400107-8 or 8S		Elevator Trim Forward
2	MC0400107-4 or 104		Rudder Control
2	MC0400107-1 or 1CS		Aileron Direct
1	MC0400107-2 or 2CS		Aileron Carry Thru
1	MC0400107-10 or 10S		Flap Control
2	MCS2295-25-63		Chain Elevator Trim
4	MCS2294-25		Chain Connecting Link

140 1947[1]-1949
S/N 12891 thru 15075
Complete Cable Kit P/N CCKT140-03G (Galvanized)
Complete Cable Kit P/N CCKT140-03S (Stainless Steel)
Complete Pulley Kit P/N PULL-KT-01*

Qty	P/N	Galv SS	Location
1	MC0400107-5 or 105		Elevator Control Up
1	MC0400107-9 or 109		Elevator Control Down
1	MC0400107-11 or 111		Elevator Trim Carry Thru Fwd
1	MC0400107-12 or 12S		Elevator Trim Carry Thru Aft
1	MC0400107-7 or 7S		Elevator Trim Aft
1	MC0400107-8 or 8S		Elevator Trim Forward
2	MC0400107-4 or 104		Rudder Control
2	MC0400107-1 or 1CS		Aileron Direct
1	MC0400107-2 or 2CS		Aileron Carry Thru
1	MC0400107-10 or 10S		Flap Control
2	MCS2295-25-63		Chain Elevator Trim
4	MCS2294-25		Chain Connecting Link

140A 1949-1951
S/N 15200 thru 15724
Complete Cable Kit P/N CCKT140-04G (Galvanized)
Complete Cable Kit P/N CCKT140-04S (Stainless Steel)
Complete Pulley Kit P/N PULL-KT-02*

Qty	P/N	Galv SS	Location
1	MC0400107-5 or 105		Elevator Control Up
1	MC0400107-9 or 109		Elevator Control Down
1	MC0400107-11 or 111		Elevator Trim Carry Thru Fwd
1	MC0400107-12 or 12S		Elevator Trim Carry Thru Aft
1	MC0400107-13 or 113		Elevator Trim Aft

Kit continues in next column

Continued from previous column

Qty	P/N	Galv SS	Location
1	MC0400107-14 or 114		Elevator Trim Forward
1	MC0400107-18 or 118		Aileron Carry Thru
2	MC0400107-17 or 117		Aileron Direct
1	MC0400107-10 or 10S		Flap Control
2	MCS2295-25-63		Chain Elevator Trim
4	MCS2294-25		Chain Connecting Link

150 1959[1]
S/N 17001 thru 17438
Complete Cable Kit P/N CCKT150-01G (Galvanized)
Complete Cable Kit P/N CCKT150-01S (Stainless Steel)
Complete Pulley Kit P/N PULL-KT-03*

Qty	P/N	Galv SS	Location
2	MC0400107-31 or 131		Aileron Direct
1	MC0400107-21 or 121		Aileron Carry Thru
2	MC0400107-4 or 104		Rudder Control
1	MC0400107-5 or 105		Elevator Up
1	MC0400107-9 or 109		Elevator Down
1	MC0400107-22 or 122		Flap Extend Forward
1	MC0400107-23 or 123		Flap Retract Forward
2	MC0400107-34 or 134		Flap Extend LH
2	MC0400107-26 or 126		Flap Retract
1	MC0400107-11 or 111		Trim Wheel to Disconnect
1	MC0400107-29 or 129		Trim Wheel to Turnbuckle
1	MC0400107-28 or 128		Trim Act to Disconnect
1	MC0400107-30 or 130		Trim Act to Turnbuckle
2	MCS2295P25-69		Elevator Trim Chain
4	MCS2294-25		Chain Connecting Link
4	MC0422280		Aileron Bellcrank Bushing

150 1959[1]
S/N 17439 thru 17558
Complete Cable Kit P/N CCKT150-02G (Galvanized)
Complete Cable Kit P/N CCKT150-02S (Stainless Steel)
Complete Pulley Kit P/N PULL-KT-03*

Qty	P/N	Galv SS	Location
2	MC0400107-31 or 131		Aileron Direct
1	MC0400107-21 or 121		Aileron Carry Thru
2	MC0400107-4 or 104		Rudder Control
1	MC0400107-5 or 105		Elevator Up
1	MC0400107-9 or 109		Elevator Down
1	MC0400107-22 or 122		Flap Extend Forward
1	MC0400107-23 or 123		Flap Retract Forward
2	MC0400107-34 or 134		Flap Extend LH
1	MC0400107-26 or 126		Flap Retract
1	MC0400107-33 or 133		Flap Retract LH
1	MC0400107-11 or 111		Trim Wheel to Disconnect
1	MC0400107-29 or 129		Trim Wheel to Turnbuckle
1	MC0400107-28 or 128		Trim Act to Disconnect
1	MC0400107-30 or 130		Trim Act to Turnbuckle
2	MCS2295P25-69		Elevator Trim Chain
4	MCS2294-25		Chain Connecting Link
4	MC0422280		Aileron Bellcrank Bushing

150 1959[1]-1960
S/N 17559 thru 59018
Complete Cable Kit P/N CCKT150-03G (Galvanized)
Complete Cable Kit P/N CCKT150-03S (Stainless Steel)
Complete Pulley Kit P/N PULL-KT-03*

Qty	P/N	Galv SS	Location
2	MC0400107-31 or 131		Aileron Direct
1	MC0400107-21 or 121		Aileron Carry Thru
2	MC0400107-4 or 104		Rudder Control
1	MC0400107-5 or 105		Elevator Up
1	MC0400107-9 or 109		Elevator Down
1	MC0400107-22 or 122		Flap Extend Forward
1	MC0400107-23 or 123		Flap Retract Forward
2	MC0400107-34 or 134		Flap Extend LH
2	MC0400107-33 or 133		Flap Retract LH
1	MC0400107-11 or 111		Trim Wheel to Disconnect
1	MC0400107-29 or 129		Trim Wheel to Turnbuckle
1	MC0400107-28 or 128		Trim Act to Disconnect
1	MC0400107-30 or 130		Trim Act to Turnbuckle
2	MCS2295P25-69		Elevator Trim Chain
4	MCS2294-25		Chain Connecting Link
4	MC0422280		Aileron Bellcrank Bushing

150A,B,C 1961-1963
S/N 15059019 thru 15060087
Complete Cable Kit P/N CCKT150-04G (Galvanized)
Complete Cable Kit P/N CCKT150-04S (Stainless Steel)
Complete Pulley Kit P/N PULL-KT-04*

Qty	P/N	Galv SS	Location
2	MC0400107-35 or 135		Aileron Direct
1	MC0400107-21 or 121		Aileron Carry Thru
2	MC0400107-4 or 104		Rudder Control
1	MC0400107-5 or 105		Elevator Up
1	MC0400107-9 or 109		Elevator Down
1	MC0400107-22 or 122		Flap Extend Forward
1	MC0400107-23 or 123		Flap Retract Forward
2	MC0400107-34 or 134		Flap Extend LH
2	MC0400107-33 or 133		Flap Retract LH
1	MC0400107-11 or 111		Trim Wheel to Disconnect
1	MC0400107-29 or 129		Trim Wheel to Turnbuckle
1	MC0400107-28 or 128		Trim Act to Disconnect
1	MC0400107-30 or 130		Trim Act to Turnbuckle
2	MCS2295P25-69		Elevator Trim Chain

Kit continues in next column

Continued from previous column

Qty	P/N	Galv SS	Location
4	MCS2294-25		Chain Connecting Link
4	MC0422280		Aileron Bellcrank Bushing

150D,E 1964-1965
S/N 15060088 thru 15061532
Complete Cable Kit P/N CCKT150-05G (Galvanized)
Complete Cable Kit P/N CCKT150-05S (Stainless Steel)
Complete Pulley Kit P/N PULL-KT-05* or 06* Note 1

Qty	P/N	Galv SS	Location
2	MC0400107-41 or 141		Aileron Direct
1	MC0400107-21 or 121		Aileron Carry Thru
2	MC0400107-4 or 104		Rudder Control
1	MC0510105-5 or 105		Elevator Up
1	MC0400107-9 or 109		Elevator Down
2	MC0400107-39 or 139		Flap Extend Forward
2	MC0400107-37 or 137		Flap Retract Forward
2	MC0400107-40 or 140		Flap Extend to Bellcrank
2	MC0400107-38 or 138		Flap Retract to Bellcrank
1	MC0400107-11 or 111		Trim Wheel to Disconnect
1	MC0400107-29 or 129		Trim Wheel to Turnbuckle
1	MC0400107-28 or 128		Trim Act to Disconnect
1	MC0400107-30 or 130		Trim Act to Turnbuckle
2	MCS2295P25-69		Elevator Trim Chain
4	MCS2294-25		Chain Connecting Link
4	MC0422280		Aileron Bellcrank Bushing

Note 1: S/N 15060088 thru 15061083 USE PULL-KT-05
S/N 15061084 thru 15061532 USE PULL-KT-06

150F[1] 1966[1]
S/N 15061533 thru 15061778
Complete Cable Kit P/N CCKT150-06G (Galvanized)
Complete Cable Kit P/N CCKT150-06S (Stainless Steel)
Complete Pulley Kit P/N PULL-KT-07*

Qty	P/N	Galv SS	Location
2	MC0400107-41 or 141		Aileron Direct
1	MC0400107-21 or 121		Aileron Carry Thru
2	MC0400107-47 or 147		Rudder Control Forward
2	MC0400107-48 or 148		Rudder Control Aft
1	MC0400107-5 or 105		Elevator Up
1	MC0400107-9 or 109		Elevator Down
2	MC0400107-45 or 145		Flap
2	MC0400107-46 or 146		Flap
1	MC0400107-42 or 142		Trim Wheel to Disconnect
1	MC0400107-43 or 143		Trim Wheel to Turnbuckle
1	MC0400107-28 or 128		Trim Act to Disconnect
1	MC0400107-30 or 130		Trim Act to Turnbuckle
2	MCS2295P25-69		Elevator Trim Chain
4	MCS2294-25		Chain Connecting Link
4	MC0422280		Aileron Bellcrank Bushing

150F[1],G 1966[1]-1967 F150F,G 1966-1967
S/N 15061779 thru 15067198,
S/N F1500001 thru F1500219
Complete Cable Kit P/N CCKT150-11G (Galvanized)
Complete Cable Kit P/N CCKT150-11S (Stainless Steel)
Complete Pulley Kit P/N PULL-KT-07* Note 1

Qty	P/N	Galv SS	Location
2	MC0400107-41 or 141		Aileron Direct
1	MC0400107-21 or 121		Aileron Carry Thru
1	MC0400107-49 or 149[3]		Rudder Control LH
1	MC0400107-50 or 150[3]		Rudder Control RH
1	MC0400107-5 or 105		Elevator Up
1	MC0400107-9 or 109		Elevator Down
2	MC0400107-45 or 145		Flap
2	MC0400107-46 or 146		Flap
1	MC0400107-42 or 142		Trim Wheel to Disconnect
1	MC0400107-43 or 143		Trim Wheel to Turnbuckle
1	MC0400107-30 or 130		Trim Act to Turnbuckle
1	MC0400107-28 or 128		Trim Act to Disconnect
2	MCS2295P25-69		Chain to Tab Act
4	MCS2294-25		Chain Connecting Link
4	MC0422280		Aileron Bellcrank Bushing

Note 1: S/N 15061779 thru 15067198 only

150H 1968 F150H 1968
S/N 15067199 thru 15069308, F1500220 thru F1500389
Complete Cable Kit P/N CCKT150-07G (Galvanized)
Complete Cable Kit P/N CCKT150-07S (Stainless Steel)
Complete Pulley Kit P/N PULL-KT-08* Note 1

Qty	P/N	Galv SS	Location
2	MC0400107-41 or 141		Aileron Direct
1	MC0400107-21 or 121		Aileron Carry Thru
1	MC0400107-49 or 149[3]		Rudder Control LH
1	MC0400107-50 or 150[3]		Rudder Control RH
1	MC0400107-5 or 105		Elevator Up
1	MC0400107-9 or 109		Elevator Down
2	MC0400107-45 or 145		Flap
2	MC0400107-46 or 146		Flap
1	MC0400107-28 or 128		Trim Act to Disconnect

Kit continues on next page

*** See pages 107-108 for Pulley Kit Components**
[1] Partial model eligibility
[2] Included in both galvanized and stainless kits.
[3] MC0400107-50/150 RH cable attaches to left side of rudder bell crank and right side of rudder pedal pedestal. MC0400107-49/149 LH cable attaches to right side of rudder bell crank and left side of rudder pedal pedestal.

Continued from previous page

1	MC0400107-30 or 130	Trim Actuator to Turnbuckle
1	MC0400107-52 or 152	Trim Wheel to Disconnect
1	MC0400107-53 or 153	Trim Wheel to Turnbuckle
1	MCS2295P25-69	Chain to Tab Actuator
1	MCS2295-25-61	Chain Trim Wheel
4	MCS2294-25	Chain Connecting Link
4	MC0422280	Aileron Bellcrank Bushing

Note 1: For S/N 15061779 thru 15069308 only

150J[1] 1969[1], F150J 1969
S/N 15069309 thru 15070503, F1500390 thru F1500529
Complete Cable Kit P/N CCKT150-08G (Galvanized)
Complete Cable Kit P/N CCKT150-08S (Stainless Steel)
Complete Pulley Kit P/N PULL-KT-09* Note 1

Qty	P/N	Galv	SS	Location
2	MC0400107-41 or 141			Aileron Direct
1	MC0400107-21 or 121			Aileron Carry Thru
1	MC0400107-49 or 149[3]			Rudder Control LH
1	MC0400107-50 or 150[3]			Rudder Control RH
1	MC0400107-5 or 105			Elevator Up
1	MC0400107-9 or 109			Elevator Down
2	MC0400107-45 or 145			Flap
2	MC0400107-46 or 146			Flap
1	MC0400107-28 or 128			Trim Actuator to Disconnect
1	MC0400107-30 or 130			Trim Actuator to Turnbuckle
1	MC0400107-54 or 154			Trim Wheel to Disconnect
1	MC0400107-55 or 155			Trim Wheel to Turnbuckle
1	MCS2295P25-69			Chain Trim Actuator
1	MCS2295-25-61			Chain Trim Wheel
4	MCS2294-25			Chain Connecting Link
4	MC0422280			Aileron Bellcrank Bushing

Note 1: For S/N 15069309 thru 15070503 only

150J[1],K,L,M[1],A150K,L,M[1],FA150K,L, FRA150L,M[1] 1969[1]-1975
S/N 15070504 thru 15077005 Note 1,
A1500001 thru A1500609 Note 2,
F15000530 thru F15001248 Note 3,
FA1500001 thru FA1500120 Note 4,
FRA1500121 thru FRA1500281 Note 5
Complete Cable Kit P/N CCKT150-09G (Galvanized)
Complete Cable Kit P/N CCKT150-09S (Stainless Steel)
Complete Pulley Kit P/N PULL-KT-09* thru PULL-KT-12*

Qty	P/N	Galv	SS	Location
2	MC0400107-41 or 141			Aileron Direct
1	MC0400107-21 or 121			Aileron Carry Thru
1	MC0400107-49 or 149[3]			Rudder Control LH
1	MC0400107-50 or 150[3]			Rudder Control RH
1	MC0400107-5 or 105			Elevator Up
1	MC0400107-9 or 109			Elevator Down
2	MC0400107-45 or 145			Flap
2	MC0400107-46 or 146			Flap
1	MC0400107-28 or 128			Trim Actuator to Disconnect
1	MC0400107-30 or 130			Trim Actuator to Turnbuckle
1	MC0400107-55 or 155			Trim Wheel to Turnbuckle
1	MC0400107-56 or 156			Trim Wheel to Disconnect
1	MCS2295P25-69			Chain Trim Actuator
1	MCS2295P25-63			Chain Trim Wheel
4	MCS2294-25			Chain Connecting Link
4	MC0422280			Aileron Bellcrank Bushing

Note 1: S/N 15070504 thru 15071128 USE PULL-KT-09
S/N 15071129 thru 15074399 USE PULL-KT-10
S/N 15074400 thru 15074661 USE PULL-KT-11
S/N 15074662 thru 15077005 USE PULL-KT-12
Note 2: S/N A1500001 thru A1500387 USE PULL-KT-10
S/N A1500388 thru A1500415 USE PULL-KT-11
Note 3: S/N F15000530 thru F15000943 USE PULL-KT-10
S/N F1500944 thru F15001062 USE PULL-KT-11
S/N F15001063 thru F15001248 USE PULL-KT-12
Note 4: S/N FA1500001 thru FA1500120 USE PULL-KT-10
Note 5: S/N FRA1500121 thru FRA1500211 USE PULL-KT-10
S/N FRA1500212 thru FRA1500261 USE PULL-KT-12

150M[1],A150M[1],F150M[1],FRA150M[1] 1976-1977
S/N 15077006 thru 15079405,
A1500610 thru A1500734,
F15001249 thru F15001428,
FRA1500282 thru FRA1500336
Complete Cable Kit P/N CCKT150-10G (Galvanized)
Complete Cable Kit P/N CCKT150-10S (Stainless Steel)
Complete Pulley Kit P/N PULL-KT-12* Note 1

Qty	P/N	Galv	SS	Location
2	MC0400107-41 or 141			Aileron Direct
1	MC0400107-21 or 121			Aileron Carry Thru
1	MC0400107-49 or 149[3]			Rudder Control LH
1	MC0400107-50 or 150[3]			Rudder Control RH
1	MC0400107-5 or 105			Elevator Up
1	MC0400107-9 or 109			Elevator Down
2	MC0400107-45 or 145			Flap
2	MC0400107-46 or 146			Flap
1	MC0400107-57 or 157			Trim Actuator to Disconnect
1	MC0400107-30 or 130			Trim Actuator to Turnbuckle
1	MC0400107-55 or 155			Trim Wheel to Turnbuckle
1	MC0400107-56 or 156			Trim Wheel to Disconnect
1	MCS2295P25-69			Chain Trim Actuator
1	MCS2295P25-63			Chain Trim Wheel
4	MCS2294-25			Chain Connecting Link
4	MC0422280			Aileron Bellcrank Bushing

Note 1: PULL-KT-12 is eligible for all serial numbers except S/N A1500610 thru A1500734

152[1],A152[1],F152[1],FA152[1] 1978[1]-1979[1]
S/N 15279406 thru 15281298,
15281300 thru 15281314, 15281316 thru 15281326,
15281328 thru 15281340, 15281342 thru 15281349,
15281351 thru 15281359, 15281361 thru 15281369,
15281371 thru 15281380, 15281382 thru 15281389,
15281391 thru 15281400, 15281402 thru 15281409,
15281411 thru 15281420, 15281422 thru 15281426,
A1520735 thru A1520785, F15201429 thru F15201538,
FA1520337 thru FA1520352
Complete Cable Kit P/N CCKT152-01G (Galvanized)
Complete Cable Kit P/N CCKT152-01S (Stainless Steel)
Complete Pulley Kit P/N PULL-KT-13*

Qty	P/N	Galv	SS	Location
1	MC0400107-5 or 105			Elevator Up
1	MC0400107-9 or 109			Elevator Down
1	MC0400107-56 or 156			Trim Wheel to Disconnect
1	MC0400107-55 or 155			Trim Wheel to Turnbuckle
1	MC0400107-30 or 130			Trim Actuator to Turnbuckle
1	MC0400107-57 or 157			Trim Actuator to Disconnect
1	MC0400107-49 or 149[3]			Rudder Control LH
1	MC0400107-50 or 150[3]			Rudder Control RH
2	MC0400107-45 or 145			Flap
2	MC0400107-46 or 146			Flap
2	MC0400107-41 or 141			Aileron Direct
1	MC0400107-21 or 121			Aileron Carry Thru
1	MCS2295P25-63			Chain Trim Wheel
1	MCS2295P25-69			Chain Trim Actuator
4	MCS2294-25			Chain Connecting Link
4	MC0422280			Aileron Bellcrank Bushing

152[1],A152[1],F152[1],FA152[1] 1978[1]-1985
S/N 15281299, 15281315, 15281327, 15281341, 15281350,
15281360, 15281370, 15281381, 15281390, 15281401,
15281410, 15281421,
15281427 thru 15286033, A1520786 thru A1521049,
F15201539 thru F15201980,
FA1520353 thru FA1520425
Complete Cable Kit P/N CCKT152-02G (Galvanized)
Complete Cable Kit P/N CCKT152-02S (Stainless Steel)
Complete Pulley Kit P/N PULL-KT-13* Note 1

Qty	P/N	Galv	SS	Location
2	MC0400107-66 or 166			Elevator Forward
1	MC0400107-63 or 163			Elevator Up Aft
1	MC0400107-64 or 164			Elevator Down Aft
1	MC0400107-56 or 156			Trim Wheel to Disconnect
1	MC0400107-55 or 155			Trim Wheel to Turnbuckle
1	MC0400107-30 or 130			Trim Actuator to Turnbuckle
1	MC0400107-57 or 157			Tab Actuator to Disconnect
1	MC0400107-49 or 149[3]			Rudder Control LH
1	MC0400107-50 or 150[3]			Rudder Control RH
2	MC0400107-45 or 145			Flap
2	MC0400107-46 or 146			Flap
2	MC0400107-60 or 160			Aileron Direct Cabin
1	MC0400107-61 or 161			Aileron Direct LH Wing
1	MC0400107-65 or 165			Aileron Direct RH Wing
1	MC0400107-59 or 159			Aileron Carry Thru LH
1	MC0400107-58 or 158			Aileron Carry Thru RH
1	MCS2295P25-63			Chain Trim Wheel
1	MCS2295P25-69			Chain Trim Actuator
4	MCS2294-25			Chain Connecting Link
4	MC0422280			Aileron Bellcrank Bushing

Note 1: PULL-KT-13 is eligible for all serial numbers except as noted below.
For S/N F15201539 thru F15201952 only
For S/N FA1520353 thru FA1520387 only

170 1948
S/N 18000 thru 18729
Complete Cable Kit P/N CCKT170-01G (Galvanized)
Complete Cable Kit P/N CCKT170-01S (Stainless Steel)
Complete Pulley Kit P/N PULL-KT-14*

Qty	P/N	Galv	SS	Location
2	MC0510105-2 or 102			Aileron Direct
2	MC0510105-3 or 103			Aileron Carry Thru
2	MC0510105-6 or 106			Flap Control Upper
1	MC0510105-5 or 105			Flap Control Lower
2	MC0510105-1 or 101			Rudder Control
2	MC0510105-4 or 104			Elevator Control
1	MC0510105-9 or 109			Trim Wheel to Turnbuckle
1	MC0510105-7 or 107			Trim Wheel to Disconnect
1	MC0510105-8 or 108			Trim Actuator to Turnbuckle
1	MC0510105-10 or 110			Trim Actuator to Disconnect
2	MCS2295-25-63			Chain Elevator Trim
4	MCS2294-25			Chain Connecting Link

170A 1949-1951
S/N 18730 thru 20266
Complete Cable Kit P/N CCKT170-02G (Galvanized)
Complete Cable Kit P/N CCKT170-02S (Stainless Steel)
Complete Cable Kit P/N CCKT170-02SF (Float Plane)
Complete Pulley Kit P/N PULL-KT-15*

Qty	P/N	Galv	SS	Location
2	MC0510105-12 or 112			Aileron Direct
1	MC0510105-13 or 113			Aileron Carry Thru
2	MC0510105-11 or 111			Flap Control Upper
1	MC0510105-5 or 105			Flap Control Lower [4]
1	MC0510105-114			Flap Control Lower [5]
2	MC0510105-1 or 101			Rudder Control
1	MC0510105-15 or 115			Elevator Control Upper

Kit continues in next column

Continued from previous column

Qty	P/N	Galv	SS	Location
1	MC0510105-4 or 104			Elevator Control Lower
1	MC0510105-9 or 109			Trim Wheel to Turnbuckle
1	MC0510105-7 or 107			Trim Wheel to Disconnect
1	MC0510105-8 or 108			Trim Actuator to Turnbuckle
1	MC0510105-10 or 110			Trim Actuator to Disconnect
2	MCS2295-25-63			Chain Elevator Trim
4	MCS2294-25			Chain Connecting Link

170B[1] 1952-1954
S/N 20267 thru 26504
Complete Cable Kit P/N CCKT170-03G (Galvanized)
Complete Cable Kit P/N CCKT170-03S (Stainless Steel)
Complete Pulley Kit P/N PULL-KT-16*

Qty	P/N	Galv	SS	Location
2	MC0510105-16 or 116			Aileron Direct
1	MC0510105-13 or 113			Aileron Carry Thru
1	MC0510105-21 or 121			Flap Return Forward
1	MC0510105-22 or 122			Flap Direct Forward
2	MC0510105-59 or 159			Flap Direct Outboard
1	MC0510105-61 or 161			Flap Direct LH Inboard
1	MC0510105-62 or 162			Flap Direct RH Inboard
2	MC0510105-60 or 160			Flap Return Outboard
1	MC0510105-63 or 163			Flap Return LH Inboard
1	MC0510105-64 or 164			Flap Return RH Inboard
2	MC0510105-1 or 101			Rudder Control
1	MC0510105-15 or 115			Elevator Control Upper
1	MC0510105-4 or 104			Elevator Control Lower
1	MC0510105-9 or 109			Trim Wheel to Turnbuckle
1	MC0510105-7 or 107			Trim Wheel to Disconnect
1	MC0510105-8 or 108			Trim Actuator to Turnbuckle
1	MC0510105-10 or 110			Trim Actuator to Disconnect
2	MCS2295-25-63			Chain Elevator Trim
4	MCS2294-25			Chain Connecting Link

170B[1] 1955-1956
S/N 26505 thru 27169
Complete Cable Kit P/N CCKT170-04G (Galvanized)
Complete Cable Kit P/N CCKT170-04S (Stainless Steel)
Complete Pulley Kit P/N PULL-KT-16*

Qty	P/N	Galv	SS	Location
2	MC0510105-16 or 116			Aileron Direct
1	MC0510105-13 or 113			Aileron Carry Thru
1	MC0510105-21 or 121			Flap Return Forward
1	MC0510105-22 or 122			Flap Direct Forward
2	MC0510105-59 or 159			Flap Direct Outboard
1	MC0510105-61 or 161			Flap Direct LH Inboard
1	MC0510105-62 or 162			Flap Direct RH Inboard
2	MC0510105-60 or 160			Flap Return Outboard
1	MC0510105-63 or 163			Flap Return LH Inboard
1	MC0510105-64 or 164			Flap Return RH Inboard
2	MC0510105-1 or 101			Rudder Control
2	MC0510105-38 or 138			Tailwheel Steering
1	MC0510105-15 or 115			Elevator Control Upper
1	MC0510105-4 or 104			Elevator Control Lower
1	MC0510105-9 or 109			Trim Wheel to Turnbuckle
1	MC0510105-7 or 107			Trim Wheel to Disconnect
1	MC0510105-8 or 108			Trim Act to Turnbuckle
1	MC0510105-10 or 110			Trim Act to Disconnect
2	MCS2295-25-63			Chain Elevator Trim
4	MCS2294-25			Chain Connecting Link

172[1] 1956-1958
S/N 28000 thru 36965
Complete Cable Kit P/N CCKT172175-01G (Galvanized)
Complete Cable Kit P/N CCKT172175-01S (Stainless)
Complete Pulley Kit P/N PULL-KT-17*

Qty	P/N	Galv	SS	Location
2	MC0510105-39 or 139			Rudder Forward
1	MC0510105-56 or 156			Rudder Aft LH
1	MC0510105-55 or 155			Rudder Aft RH
1	MC0510105-42 or 142			Elevator Forward Upper
1	MC0510105-40 or 140			Elevator Forward Lower
1	MC0510105-41 or 141			Elevator Aft Upper
1	MC0510105-54 or 154			Elevator Aft Lower
1	MC0510105-58 or 158			Trim Wheel to Turnbuckle
1	MC0510105-57 or 157			Trim Wheel to Disconnect
1	MC0510105-44 or 144			Trim Act to Turnbuckle
1	MC0510105-45 or 145			Trim Act to Disconnect
2	MC0510105-16 or 116			Aileron Direct
1	MC0510105-13 or 113			Aileron Carry Thru
2	MC0510105-59 or 159			Flap Direct Upper
2	MC0510105-60 or 160			Flap Return Upper
1	MC0510105-63 or 163			Flap Return LH Lower
1	MC0510105-64 or 164			Flap Return RH Lower
1	MC0510105-61 or 161			Flap Direct LH Lower
1	MC0510105-62 or 162			Flap Direct RH Lower
1	MC0510105-21 or 121			Flap Return Forward
1	MC0510105-22 or 122			Flap Direct Forward
1	MCS2295-25-71			Chain Trim Wheel

Kit continues on next page

*** See pages 107-108 for Pulley Kit Components**
[1] Partial model eligibility
[3] See note on the bottom of page 74 regarding rudder cable P/Ns MC0400107-49/149 and MC04001047-50/150 installation.
[4] Not included in CCKT170-02SF
[5] Only included in CCKT170-02SF

Continued from previous page

Qty	P/N	Galv	SS	Location
1	MCS2295-25-67			Chain Trim Actuator
4	MCS2294-25			Chain Connecting Link
4	MC0422280			Aileron Bellcrank Bushing

172[1] 1959, 175 1958-1959
S/N 36966 thru 46754, 55001 thru 56238
Complete Cable Kit P/N CCKT172175-02G (Galvanized)
Complete Cable Kit P/N CCKT172175-02S (Stainless)
Complete Pulley Kit P/N PULL-KT-17*

Qty	P/N	Galv	SS	Location
2	MC0510105-39 or 139			Rudder Forward
1	MC0510105-56 or 156			Rudder Aft LH
1	MC0510105-55 or 155			Rudder Aft RH
1	MC0510105-42 or 142			Elevator Forward Upper
1	MC0510105-40 or 140			Elevator Forward Lower
1	MC0510105-41 or 141			Elevator Aft Upper
1	MC0510105-54 or 154			Elevator Aft Lower
1	MC0510105-58 or 158			Trim Wheel to Turnbuckle
1	MC0510105-57 or 157			Trim Wheel to Disconnect
1	MC0510105-44 or 144			Trim Actuator to Turnbuckle
1	MC0510105-45 or 145			Trim Actuator to Disconnect
2	MC0510105-72 or 172			Aileron Direct
1	MC0510105-13 or 113			Aileron Carry Thru
2	MC0510105-59 or 159			Flap Direct Upper
2	MC0510105-60 or 160			Flap Return Upper
1	MC0510105-63 or 163			Flap Return LH Lower
1	MC0510105-64 or 164			Flap Return RH Lower
1	MC0510105-61 or 161			Flap Direct LH Lower
1	MC0510105-62 or 162			Flap Direct RH Lower
1	MC0510105-21 or 121			Flap Return Forward
1	MC0510105-22 or 122			Flap Direct Forward
1	MCS2295-25-71			Chain Trim Wheel
1	MCS2295-25-67			Chain Trim Actuator
4	MCS2294-25			Chain Connecting Link
4	MC0422280			Aileron Bellcrank Bushing

172A[1], 1960[1]
S/N 46755 thru 47298
Complete Cable Kit P/N CCKT172175-03G (Galvanized)
Complete Cable Kit P/N CCKT172175-03S (Stainless)
Complete Pulley Kit P/N PULL-KT-17*

Qty	P/N	Galv	SS	Location
2	MC0510105-39 or 139			Rudder Forward
1	MC0510105-75 or 175			Rudder Aft LH
1	MC0510105-76 or 176			Rudder Aft RH
1	MC0510105-42 or 142			Elevator Forward Upper
1	MC0510105-40 or 140			Elevator Forward Lower
1	MC0510105-41 or 141			Elevator Aft Upper
1	MC0510105-54 or 154			Elevator Aft Lower
1	MC0510105-58 or 158			Trim Wheel to Turnbuckle
1	MC0510105-57 or 157			Trim Wheel to Disconnect
1	MC0510105-44 or 144			Trim Actuator to Turnbuckle
1	MC0510105-45 or 145			Trim Actuator to Disconnect
2	MC0510105-72 or 172			Aileron Direct
1	MC0510105-13 or 113			Aileron Carry Thru
2	MC0510105-59 or 159			Flap Direct Upper
2	MC0510105-60 or 160			Flap Return Upper
1	MC0510105-63 or 163			Flap Return LH Lower
1	MC0510105-64 or 164			Flap Return RH Lower
1	MC0510105-61 or 161			Flap Direct LH Lower
1	MC0510105-62 or 162			Flap Direct RH Lower
1	MC0510105-21 or 121			Flap Return Forward
1	MC0510105-22 or 122			Flap Direct Forward
1	MCS2295-25-71			Chain Trim Wheel
1	MCS2295-25-67			Chain Trim Actuator
4	MCS2294-25			Chain Connecting Link
4	MC0422280			Aileron Bellcrank Bushing

172A[1],B,C 1960[1]-1962 175A,B,C 1960-1962
S/N 47299 thru 17249544, 56239 thru 17557119
Complete Cable Kit P/N CCKT172175-04G (Galvanized)
Complete Cable Kit P/N CCKT172175-04S (Stainless)
Complete Pulley Kit P/N PULL-KT-17*

Qty	P/N	Galv	SS	Location
2	MC0510105-39 or 139			Rudder Forward
1	MC0510105-80 or 180			Rudder Aft LH
1	MC0510105-81 or 181			Rudder Aft RH
1	MC0510105-42 or 142			Elevator Forward Upper
1	MC0510105-40 or 140			Elevator Forward Lower
1	MC0510105-41 or 141			Elevator Aft Upper
1	MC0510105-54 or 154			Elevator Aft Lower
1	MC0510105-58 or 158			Trim Wheel to Turnbuckle
1	MC0510105-57 or 157			Trim Wheel to Disconnect
1	MC0510105-44 or 144			Trim Actuator to Turnbuckle
1	MC0510105-45 or 145			Trim Actuator to Disconnect
2	MC0510105-72 or 172			Aileron Direct
1	MC0510105-13 or 113			Aileron Carry Thru
2	MC0510105-59 or 159			Flap Direct Upper
2	MC0510105-60 or 160			Flap Return Upper
1	MC0510105-63 or 163			Flap Return LH Lower
1	MC0510105-64 or 164			Flap Return RH Lower
1	MC0510105-61 or 161			Flap Direct LH Lower
1	MC0510105-62 or 162			Flap Direct RH Lower
1	MC0510105-21 or 121			Flap Return Forward
1	MC0510105-22 or 122			Flap Direct Forward
1	MCS2295-25-71			Chain Trim Wheel

Kit continues in next column

Continued from previous column

Qty	P/N	Galv	SS	Location
1	MC0510105-62 or 162			Flap Direct RH Lower
1	MCS2295-25-67			Chain Trim Actuator
4	MCS2294-25			Chain Connecting Link
4	MC0422280			Aileron Bellcrank Bushing

172D,P172,F172D, FP172 1963
S/N 17249545 thru 17250572, P17257120 thru P17257188, F172-0001 thru F172-0018, FP172-0001 thru FP172-0003
Complete Cable Kit P/N CCKT172175-05G (Galvanized)
Complete Cable Kit P/N CCKT172175-05S (Stainless)
Complete Pulley Kit P/N PULL-KT-18*

Qty	P/N	Galv	SS	Location
1	MC0510105-205 or 305			Rudder Forward LH
1	MC0510105-206 or 306			Rudder Forward RH
2	MC0510105-207 or 307			Rudder Aft
2	MC0510105-208 or 308			Elevator Forward
1	MC0510105-290 or 390			Elevator Aft Lower
1	MC0510105-291 or 391			Elevator Aft Upper
1	MC0510105-58 or 158			Trim Wheel to Turnbuckle
1	MC0510105-57 or 157			Trim Wheel to Disconnect
1	MC0510105-44 or 144			Trim Actuator to Turnbuckle
1	MC0510105-45 or 145			Trim Actuator to Disconnect
2	MC0510105-72 or 172			Aileron Direct
1	MC0510105-13 or 113			Aileron Carry Thru
2	MC0510105-59 or 159			Flap Direct Upper
2	MC0510105-60 or 160			Flap Return Upper
1	MC0510105-63 or 163			Flap Return LH Lower
1	MC0510105-64 or 164			Flap Return RH Lower
1	MC0510105-61 or 161			Flap Direct LH Lower
1	MC0510105-62 or 162			Flap Direct RH Lower
1	MC0510105-21 or 121			Flap Return Forward
1	MC0510105-22 or 122			Flap Direct Forward
1	MC0510105-70 or 170			Parking Brake
1	MC0713070-28[2]			Cable Assembly Park Brake
1	MCS2295-25-71			Chain Trim Wheel
1	MCS2295-25-67			Chain Trim Actuator
4	MCS2294-25			Chain Connecting Link
4	MC0422280			Aileron Bellcrank Bushing

172E 1964
S/N 17250573 thru 17251822
Complete Cable Kit P/N CCKT172175-06G (Galvanized)
Complete Cable Kit P/N CCKT172175-06S (Stainless)
Complete Pulley Kit P/N PULL-KT-19*

Qty	P/N	Galv	SS	Location
1	MC0510105-205 or 305			Rudder Forward LH
1	MC0510105-206 or 306			Rudder Forward RH
2	MC0510105-207 or 307			Rudder Aft
2	MC0510105-208 or 308			Elevator Forward
1	MC0510105-290 or 390			Elevator Aft Forward Lower
1	MC0510105-291 or 391			Elevator Aft Upper
1	MC0510105-213 or 313			Aileron Yoke Primary
1	MC0510105-215 or 315			Aileron Yoke LH
1	MC0510105-214 or 314			Aileron Yoke RH
1	MC0510105-216 or 316			Aileron Yoke Transition
1	MC0510105-58 or 158			Trim Wheel to Turnbuckle
1	MC0510105-57 or 157			Trim Wheel to Disconnect
1	MC0510105-44 or 144			Trim Actuator to Turnbuckle
1	MC0510105-45 or 145			Trim Actuator to Disconnect
2	MC0510105-217 or 317			Aileron Direct
1	MC0510105-13 or 113			Aileron Carry Thru
2	MC0510105-59 or 159			Flap Direct Upper
2	MC0510105-60 or 160			Flap Return Upper
1	MC0510105-63 or 163			Flap Return LH Lower
1	MC0510105-64 or 164			Flap Return RH Lower
1	MC0510105-61 or 161			Flap Direct LH Lower
1	MC0510105-62 or 162			Flap Direct RH Lower
1	MC0510105-21 or 121			Flap Return Forward
1	MC0510105-22 or 122			Flap Direct Forward
1	MC0510105-70 or 170			Parking Brake
1	MC0713070-28 [2]			Cable Assembly Park Brake
1	MCS2295-25-71			Chain Trim Wheel
1	MCS2295-25-67			Chain Trim Actuator
4	MCS2294-25			Chain Connecting Link
4	MC0422280			Aileron Bellcrank Bushing

172F,G,H,I,K,L[1],F172F,G,H,K,L[1], FR172E,F,G,H[1] 1965-1972[1]
S/N 17251823 thru 17259834 Note 1,
F172-0086 thru F17200820 Note 2,
FR17200001 thru FR17200288 Note 3
Complete Cable Kit P/N CCKT172175-07G (Galvanized)
Complete Cable Kit P/N CCKT172175-07S (Stainless)
Complete Pulley Kit P/N PULL-KT-20* or PULL-KT-21*

Qty	P/N	Galv	SS	Location
1	MC0510105-205 or 305			Rudder Forward LH
1	MC0510105-206 or 306			Rudder Forward RH
2	MC0510105-207 or 307			Rudder Aft
2	MC0510105-208 or 308			Elevator Forward
1	MC0510105-290 or 390			Elevator Aft Lower
1	MC0510105-291 or 391			Elevator Aft Upper
1	MC0510105-213 or 313			Aileron Yoke Primary
1	MC0510105-215 or 315			Aileron Yoke LH
1	MC0510105-214 or 314			Aileron Yoke RH
1	MC0510105-216 or 316			Aileron Yoke Transition
1	MC0510105-220 or 320			Trim Wheel to Turnbuckle

Kit continues in next column

Continued from previous column

Qty	P/N	Galv	SS	Location
1	MC0510105-221 or 321			Trim Wheel to Disconnect
1	MC0510105-44 or 144			Trim Actuator to Turnbuckle
1	MC0510105-45 or 145			Trim Actuator to Disconnect
2	MC0510105-224 or 324			Aileron Direct
1	MC0510105-13 or 113			Aileron Carry Thru
2	MC0510105-93 or 193[6]			Flap Direct & Retract
2	MC0510105-94 or 194[6]			Flap Direct & Retract
1	MC0510105-70 or 170			Parking Brake Cable
1	MC0713070-28[2]			Cable Assembly Park Brake
1	MCS2295P25-55			Chain Trim Wheel
1	MCS2295-25-67			Chain Trim Actuator
4	MCS2294-25			Chain Connecting Link
4	MC0422280			Aileron Bellcrank Bushing

Note 1: S/N 17251823 thru 17259223 USE PULL-KT-20
Note 2: USE PULL-KT-20
Note 3: USE PULL-KT-21

172L[1],M[1],F172L[1]M[1],FR172H[1]J[1] 1971[1]-1975[1]
S/N 17259835 thru 17264202, Note 1
F17200821 thru F17201234, Note 2
FR17200289 thru FR17200559 Note 3
Complete Cable Kit P/N CCKT172175-08G (Galvanized)
Complete Cable Kit P/N CCKT172175-08S (Stainless)
Complete Pulley Kit P/N PULL-KT-20*, -21* or -22*

Qty	P/N	Galv	SS	Location
1	MC0510105-205 or 305			Rudder Forward LH
1	MC0510105-206 or 306			Rudder Forward RH
2	MC0510105-207 or 307			Rudder Aft
2	MC0510105-208 or 308			Elevator Forward
1	MC0510105-290 or 390			Elevator Aft Lower
1	MC0510105-291 or 391			Elevator Aft Upper
1	MC0510105-213 or 313			Aileron Yoke Primary
1	MC0510105-215 or 315			Aileron Yoke LH
1	MC0510105-214 or 314			Aileron Yoke RH
1	MC0510105-216 or 316			Aileron Yoke Transition
1	MC0510105-220 or 320			Trim Wheel to Turnbuckle
1	MC0510105-221 or 321			Trim Wheel to Disconnect
1	MC0510105-44 or 144			Trim Actuator to Turnbuckle
1	MC0510105-45 or 145			Trim Actuator to Disconnect
2	MC0510105-224 or 324			Aileron Direct
1	MC0510105-13 or 113			Aileron Carry Thru
2	MC0510105-93 or 193[6]			Flap Direct & Retract
2	MC0510105-94 or 194[6]			Flap Direct & Retract
1	MC0510105-232[2]			Parking Brake Cable
1	MC0713070-28[2]			Cable Assembly Park Brake
1	MCS2295P25-55			Chain Trim Wheel
1	MCS2295-25-67			Chain Trim Actuator
4	MCS2294-25			Chain Connecting Link
4	MC0422280			Aileron Bellcrank Bushing

Note 1: S/N 17259904 thru 17263458 USE PULL-KT-20
S/N 17263459 thru 17264202 USE PULL-KT-22
Note 2: USE PULL-KT-20
Note 3: USE PULL-KT-21

172M[1],F172M[1] 1975[1]
S/N 17264203 thru 17265684,
F17201235 thru F17201384
Complete Cable Kit P/N CCKT172175-09G (Galvanized)
Complete Cable Kit P/N CCKT172175-09S (Stainless)
Complete Pulley Kit P/N PULL-KT-22*

Qty	P/N	Galv	SS	Location
1	MC0510105-239 or 339			Rudder LH
1	MC0510105-238 or 338			Rudder RH
2	MC0510105-208 or 308			Elevator Forward
1	MC0510105-290 or 390			Elevator Aft Lower
1	MC0510105-291 or 391			Elevator Aft Upper
1	MC0510105-213 or 313			Aileron Yoke Primary
1	MC0510105-215 or 315			Aileron Yoke LH
1	MC0510105-214 or 314			Aileron Yoke RH
1	MC0510105-216 or 316			Aileron Yoke Transition
1	MC0510105-220 or 320			Trim Wheel to Turnbuckle
1	MC0510105-221 or 321			Trim Wheel to Disconnect
1	MC0510105-44 or 144			Trim Actuator to Turnbuckle
1	MC0510105-45 or 145			Trim Actuator to Disconnect
2	MC0510105-224 or 324			Aileron Direct
1	MC0510105-13 or 113			Aileron Carry Thru
2	MC0510105-93 or 193[6]			Flap Direct & Retract
2	MC0510105-94 or 194[6]			Flap Direct & Retract
1	MC0510105-232[2]			Parking Brake Cable
1	MC0713070-28[2]			Cable Assembly Park Brake
1	MCS2295P25-55			Chain Trim Wheel
1	MCS2295-25-67			Chain Trim Actuator
4	MCS2294-25			Chain Connecting Link
4	MC0422280			Aileron Bellcrank Bushing

*** See pages 107-108 for Pulley Kit Components**
[1] Partial model eligibility
[2] Included in both galvanized and stainless kits.
[6] Due to inconsistency in OEM parts these flap cables should be replaced at the same time.

172M[1],N[1],F172M[1],N[1],FR172J[1]K[1] 1976-1979[1]
R172K[1] 1977-1978[1]
S/N 17265685 thru 17270454, F17201385 thru F17201829,
FR17200571 thru FR17200640, Note 1
R1722000 thru R1722822, Note 2
Complete Cable Kit P/N CCKT172175-10G (Galvanized)
Complete Cable Kit P/N CCKT172175-10S (Stainless)
Complete Pulley Kit P/N PULL-KT-22*, -21*

Qty	P/N	Galv	SS	Location
1	MC0510105-239 or 339			Rudder Assembly LH
1	MC0510105-238 or 338			Rudder Assembly RH
2	MC0510105-208 or 308			Elevator Forward
1	MC0510105-291 or 391			Elevator Aft Upper
1	MC0510105-290 or 390			Elevator Aft Lower
1	MC0510105-241 or 341			Aileron Yoke Primary
1	MC0510105-243 or 343			Aileron Yoke LH
1	MC0510105-242 or 342			Aileron Yoke RH
1	MC0510105-244 or 344			Aileron Yoke Transition
1	MC0510105-220 or 320			Trim Wheel to Turnbuckle
1	MC0510105-221 or 321			Trim Wheel to Disconnect
1	MC0510105-44 or 144			Trim Actuator to Turnbuckle
1	MC0510105-45 or 145			Trim Actuator to Disconnect
2	MC0510105-224 or 324			Aileron Direct
1	MC0510105-13 or 113			Aileron Carry Thru
2	MC0510105-93 or 193[6]			Flap Direct & Retract
2	MC0510105-94 or 194[6]			Flap Direct & Retract
1	MC0510105-232[2]			Parking Brake Cable
1	MC0713070-28[2]			Cable Assembly Park Brake
1	MCS2295P25-55			Chain Trim Wheel
1	MCS2295-25-67			Chain Trim Actuator
4	MCS2294-25			Chain Connecting Link
4	MC0422280			Aileron Bellcrank Bushing

Note 1: S/N FR17200571 thru FR17200590
USE PULL-KT-21, FR17200591 thru FR17200640
pulley kit not available.
Note 2: Pulley kit not available

172N[1],F172N[1],P[1],FR172K[1] 1978[1]-1982[1]
R172K[1] 1978[1]-1980[1]
S/N 17270455 thru 17273850, F17201830 thru F17202169,
FR17200641 thru FR17200675, Note 1
R1722823 thru R1723353, Note 1
Complete Cable Kit P/N CCKT172175-11G (Galvanized)
Complete Cable Kit P/N CCKT172175-11S (Stainless)
Complete Pulley Kit P/N PULL-KT-22*

Qty	P/N	Galv	SS	Location
1	MC0510105-239 or 339			Rudder LH
1	MC0510105-238 or 338			Rudder RH
2	MC0510105-208 or 308			Elevator Forward
1	MC0510105-291 or 391			Elevator Aft Upper
1	MC0510105-290 or 390			Elevator Aft Lower
1	MC0510105-241 or 341			Aileron Yoke Primary
1	MC0510105-243 or 343			Aileron Yoke LH
1	MC0510105-242 or 342			Aileron Yoke RH
1	MC0510105-244 or 344			Aileron Yoke Transition
1	MC0510105-220 or 320			Trim Wheel to Turnbuckle
1	MC0510105-221 or 321			Trim Wheel to Disconnect
1	MC0510105-44 or 144			Trim Actuator to Turnbuckle
1	MC0510105-45 or 145			Trim Actuator to Disconnect
2	MC0510105-260 or 360			Aileron Direct to Top
2	MC0510105-262 or 362			Aileron Direct to Bellcrank
1	MC0510105-264 or 364			Cross to LH Bellcrank
1	MC0510105-265 or 365			Cross to RH Bellcrank
2	MC0510105-93 or 193[6]			Flap Direct & Retract
2	MC0510105-94 or 194[6]			Flap Direct & Retract
1	MC0510105-232[2]			Parking Brake Cable
1	MC0713070-28[2]			Cable Assembly Park Brake
1	MCS2295P25-55			Chain Trim Wheel
1	MCS2295-25-67			Chain Trim Actuator
4	MCS2294-25			Chain Connecting Link
4	MC0422280			Aileron Bellcrank Bushing

Note 1: Pulley kit not available

172N[1],P[1] 1980[1]1982[1], R172K[1] 1980[1]-81
S/N 17273851 thru 17275187,
S/N R1723354 thru R1723454 Note 1
Complete Cable Kit P/N CCKT172175-12G (Galvanized)
Complete Cable Kit P/N CCKT172175-12S (Stainless)
Complete Pulley Kit P/N PULL-KT-22*

Qty	P/N	Galv	SS	Location
1	MC0510105-239 or 339			Rudder LH
1	MC0510105-238 or 338			Rudder RH
2	MC0510105-208 or 308			Elevator Forward
1	MC0510105-291 or 391			Elevator Aft Upper
1	MC0510105-290 or 390			Elevator Aft Lower
1	MC0510105-241 or 341			Aileron Yoke Primary
1	MC0510105-243 or 343			Aileron Yoke LH
1	MC0510105-242 or 342			Aileron Yoke RH
1	MC0510105-244 or 344			Aileron Yoke Transition
1	MC0510105-220 or 320			Trim Wheel to Turnbuckle
1	MC0510105-221 or 321			Trim Wheel to Disconnect
1	MC0510105-44 or 144			Trim Actuator to Turnbuckle
1	MC0510105-45 or 145			Trim Actuator to Disconnect
2	MC0510105-260 or 360			Aileron Direct to Top
2	MC0510105-262 or 362			Aileron Direct to Bellcrank
1	MC0510105-264 or 364			Cross to LH Bellcrank
1	MC0510105-265 or 365			Cross to RH Bellcrank

Kit continues in next column

Continued from previous column

Qty	P/N	Galv	SS	Location
2	MC0510105-93 or 193[6]			Flap Direct & Retract
2	MC0510105-94 or 194[6]			Flap Direct & Retract
1	MC0510105-278[2]			Parking Brake Cable
1	MC0713070-28[2]			Cable Assembly Park Brake
1	MCS2295P25-55			Chain Trim Wheel
1	MCS2295-25-67			Chain Trim Actuator
4	MCS2294-25			Chain Connecting Link
4	MC0422280			Aileron Bellcrank Bushing

Note 1: Pulley kit not available

172P[1],Q 1982-1986, 172R,S 1996 and On
S/N 17275188 thru 17276673 Note 1
17280001 and On, 172S8001 and On Note 2
Complete Cable Kit P/N CCKT172175-13G (Galvanized)
Complete Cable Kit P/N CCKT172175-13S (Stainless)
Complete Pulley Kit P/N PULL-KT-19*, -22*

Qty	P/N	Galv	SS	Location
1	MC0510105-239 or 339			Rudder LH
1	MC0510105-238 or 338			Rudder RH
2	MC0510105-208 or 308			Elevator Forward
1	MC0510105-291 or 391			Elevator Aft Upper
1	MC0510105-290 or 390			Elevator Aft Lower
1	MC0510105-241 or 341			Aileron Yoke Primary
1	MC0510105-243 or 343			Aileron Yoke LH
1	MC0510105-242 or 342			Aileron Yoke RH
1	MC0510105-244 or 344			Aileron Yoke Transition
1	MC0560051-4 or 104			Trim Wheel to Turnbuckle
1	MC0560051-5 or 105			Trim Wheel to Disconnect
1	MC0510105-44 or 144			Trim Actuator to Turnbuckle
1	MC0510105-45 or 145			Trim Actuator to Disconnect
2	MC0510105-260 or 360			Aileron Direct to Top
2	MC0510105-262 or 362			Aileron Direct to Bellcrank
1	MC0510105-264 or 364			Cross to LH Bellcrank
1	MC0510105-265 or 365			Cross to RH Bellcrank
2	MC0510105-93 or 193[6]			Flap Direct & Retract
2	MC0510105-94 or 194[6]			Flap Direct & Retract
1	MC0510105-278[2]			Parking Brake
1	MC0713070-28[2]			Cable Assembly Park Brake
1	MCS2295P25-67			Chain Trim Actuator
1	MCS2295P25-59			Chain Trim Wheel
4	MCS2294-25			Chain Connecting Link
4	MC0422280			Aileron Bellcrank Bushing

Note 1: S/N 17275188 thru 17276673 USE PULL-KT-22
Note 2: S/N 17280001 and On USE PULL-KT-19
S/N 172S8001 and On USE PULL-KT-19

F172E 1964
S/N F1720019 thru F1720085
Complete Cable Kit P/N CCKT172175-14G (Galvanized)
Complete Cable Kit P/N CCKT172175-14S (Stainless)
Complete Pulley Kit P/N PULL-KT-19*

Qty	P/N	Galv	SS	Location
1	MC0510105-205 or 305			Rudder Forward LH
1	MC0510105-206 or 306			Rudder Forward RH
2	MC0510105-207 or 307			Rudder Aft
2	MC0510105-208 or 308			Elevator Forward
1	MC0510105-291 or 391			Elevator Aft Upper
1	MC0510105-290 or 390			Elevator Aft Lower
1	MC0510105-213 or 313			Aileron Yoke Primary
1	MC0510105-215 or 315			Aileron Yoke LH
1	MC0510105-214 or 314			Aileron Yoke RH
1	MC0510105-216 or 316			Aileron Yoke Transition
1	MC0510105-58 or 158			Trim Wheel to Turnbuckle
1	MC0510105-57 or 157			Trim Wheel to Disconnect
1	MC0510105-44 or 144			Trim Actuator to Turnbuckle
1	MC0510105-45 or 145			Trim Actuator to Disconnect
1	MC0510105-217 or 317			Aileron Direct
1	MC0510105-13 or 113			Aileron Carry Thru
2	MC0510105-59 or 159			Flap Direct Upper
2	MC0510105-60 or 160			Flap Return Upper
1	MC0510105-63 or 163			Flap Return LH Lower
1	MC0510105-64 or 164			Flap Return RH Lower
1	MC0510105-61 or 161			Flap Direct LH Lower
1	MC0510105-62 or 162			Flap Direct RH Lower
1	MC0510105-21 or 121			Flap Return Forward
1	MC0510105-22 or 122			Flap Direct Forward
1	MC0510105-70 or 170			Parking Brake
1	MC0713070-28 [2]			Cable Assembly Park Brake
1	MCS2295-25-71			Chain Trim Wheel
1	MCS2295-25-67			Chain Trim Actuator
4	MCS2294-25			Chain Connecting Link
4	MC0422280			Aileron Bellcrank Bushing

F172P[1] 1982[1]-1986
S/N F17202170 thru F17202254
Complete Cable Kit P/N CCKT172175-15G (Galvanized)
Complete Cable Kit P/N CCKT172175-15S (Stainless)
Complete Pulley Kit P/N PULL-KT-22*

Qty	P/N	Galv	SS	Location
1	MC0510105-239 or 339			Rudder LH
1	MC0510105-238 or 338			Rudder RH
2	MC0510105-208 or 308			Elevator Forward
1	MC0510105-291 or 391			Elevator Aft Upper
1	MC0510105-290 or 390			Elevator Aft Lower
1	MC0510105-241 or 341			Aileron Yoke Primary
1	MC0510105-243 or 343			Aileron Yoke LH

Kit continues in next column

Continued from previous column

Qty	P/N	Galv	SS	Location
1	MC0510105-242 or 342			Aileron Yoke RH
1	MC0510105-244 or 344			Aileron Yoke Transition
1	MC0560051-4 or 104			Trim Wheel to Turnbuckle
1	MC0560051-5 or 105			Trim Wheel to Disconnect
1	MC0510105-44 or 144			Trim Actuator to Turnbuckle
1	MC0510105-45 or 145			Trim Actuator to Disconnect
2	MC0510105-260 or 360			Aileron Direct to Top
2	MC0510105-262 or 362			Aileron Direct to Bellcrank
1	MC0510105-264 or 364			Cross to LH Bellcrank
1	MC0510105-265 or 365			Cross to RH Bellcrank
2	MC0510105-93 or 193[6]			Flap Direct & Retract
2	MC0510105-94 or 194[6]			Flap Direct & Retract
1	MC0510105-232[2]			Parking Brake
1	MC0713070-28[2]			Cable Assembly Park Brake
1	MCS2295P25-67			Chain Trim Actuator
1	MCS2295P25-59			Chain Trim Wheel
4	MCS2294-25			Chain Connecting Link
4	MC0422280			Aileron Bellcrank Bushing

FR172J[1] 1975[1]-1976[1]
S/N FR17200560 thru FR17200570
Complete Cable Kit P/N CCKT172175-16G (Galvanized)
Complete Cable Kit P/N CCKT172175-16S (Stainless)
Complete Pulley Kit P/N PULL-KT-21*

Qty	P/N	Galv	SS	Location
1	MC0510105-205 or 305			Rudder LH
1	MC0510105-206 or 306			Rudder RH
2	MC0510105-207 or 307			Rudder Aft
2	MC0510105-208 or 308			Elevator Forward
1	MC0510105-291 or 391			Elevator Aft Upper
1	MC0510105-290 or 390			Elevator Aft Lower
1	MC0510105-241 or 341			Aileron Yoke Primary
1	MC0510105-243 or 343			Aileron Yoke LH
1	MC0510105-242 or 342			Aileron Yoke RH
1	MC0510105-244 or 344			Aileron Yoke Transition
1	MC0510105-220 or 320			Trim Wheel to Turnbuckle
1	MC0510105-221 or 321			Trim Wheel to Disconnect
1	MC0510105-44 or 144			Trim Actuator to Turnbuckle
1	MC0510105-45 or 145			Trim Actuator to Disconnect
2	MC0510105-224 or 324			Aileron Direct
1	MC0510105-13 or 113			Aileron Carry Thru
2	MC0510105-93 or 193[6]			Flap Direct & Retract
2	MC0510105-94 or 194[6]			Flap Direct & Retract
1	MC0510105-232[2]			Parking Brake
1	MC0713070-28[2]			Cable Assembly Park Brake
1	MCS2295-25-67			Chain Trim Actuator
1	MCS2295P25-55			Chain Trim Wheel
4	MCS2294-25			Chain Connecting Link
4	MC0422280			Aileron Bellcrank Bushing

172RG 1980[1]
S/N 172RG0001 thru 172RG0076
Complete Cable Kit P/N CCKT172RG-01G (Galvanized)
Complete Cable Kit P/N CCKT172RG-01S (Stainless)

Qty	P/N	Galv	SS	Location
1	MC0510105-272 or 372			Rudder Forward LH
1	MC0510105-271 or 371			Rudder Forward RH
2	MC0510105-270 or 370			Rudder Aft
1	MCS2295P25-29			Chain, Rudder Trim, Forward
1	MCS2295P25-93			Chain, Rudder Trim, Aft
2	MC0510105-269 or 369			Elevator Forward
1	MC0510105-293 or 393			Elevator Aft Upper
1	MC0510105-292 or 392			Elevator Aft Lower
1	MC0510105-241 or 341			Aileron Yoke Primary
1	MC0510105-243 or 343			Aileron Yoke LH
1	MC0510105-242 or 342			Aileron Yoke RH
1	MC0510105-244 or 344			Aileron Yoke Transition
1	MC0560051-6 or 106			Trim Wheel to Turnbuckle
1	MC0560051-7 or 107			Trim Wheel to Disconnect
1	MC0510105-44 or 144			Trim Actuator to Turnbuckle
1	MC0510105-45 or 145			Trim Actuator to Disconnect
1	MCS2295P25-59			Chain Trim Wheel
1	MCS2295P25-67			Chain Trim Actuator
2	MC0510105-277 or 377			Aileron Direct to Yoke
2	MC0510105-262 or 362			Aileron Direct to Bellcrank
2	MC0510105-265 or 365			Aileron Carry Thru RH
2	MC0510105-264 or 364			Aileron Carry Thru LH
2	MC0510105-93 or 193[6]			Flap Direct and Retract
2	MC0510105-94 or 194[6]			Flap Direct and Retract
1	MC0510105-232[2]			Parking Brake
4	MCS2294-25			Chain Connecting Link
4	MC0422280			Aileron Bellcrank Bushing

172RG 1980[1]-1985
S/N 172RG0077 thru 172RG1191
Complete Cable Kit P/N CCKT172RG-02G (Galvanized)
Complete Cable Kit P/N CCKT172RG-02S (Stainless)

Qty	P/N	Galv	SS	Location
1	MC0510105-272 or 372			Rudder Forward LH
1	MC0510105-271 or 371			Rudder Forward RH
2	MC0510105-270 or 370			Rudder Aft

Kit continues on next page

*** See pages 107-108 for Pulley Kit Components**
[1] Partial model eligibility
[2] Included in both galvanized and stainless kits.
[6] Due to inconsistency in OEM parts these flap cables should be replaced at the same time.

Continued from previous page

Qty	P/N	Galv SS	Location
1	MCS2295P25-29		Chain, Rudder Trim, Forward
1	MCS2295P25-93		Chain, Rudder Trim, Aft
2	MC0510105-269 or 369		Elevator Forward
1	MC0510105-293 or 393		Elevator Aft Upper
1	MC0510105-292 or 392		Elevator Aft Lower
1	MC0510105-241 or 341		Aileron Yoke Primary
1	MC0510105-243 or 343		Aileron Yoke LH
1	MC0510105-242 or 342		Aileron Yoke RH
1	MC0510105-244 or 344		Aileron Yoke Transition
1	MC0560051-6 or 106		Trim Wheel to Turnbuckle
1	MC0560051-7 or 107		Trim Wheel to Disconnect
1	MC0510105-44 or 144		Trim Actuator to Turnbkle
1	MC0510105-45 or 145		Trim Actuator to Disconnect
1	MCS2295P25-59		Chain Trim Wheel
1	MCS2295P25-67		Chain Trim Actuator
2	MC0510105-277 or 377		Aileron Direct to Yoke
2	MC0510105-262 or 362		Aileron Direct to Bellcrank
2	MC0510105-265 or 365		Aileron Carry Thru RH
2	MC0510105-264 or 364		Aileron Carry Thru LH
2	MC0510105-93 or 193 6		Flap Direct and Retract
2	MC0510105-94 or 194 6		Flap Direct and Retract
1	MC0510105-278 2		Parking Brake
4	MCS2294-25		Chain Connecting Link
4	MC0422280		Aileron Bellcrank Bushing

177 1968-1978
S/N 17700001 thru 17701164

Qty	P/N	SS	Location
1	MC0510105-232		Parking Brake
1	MC0510105-70		Parking Brake

180 1 1953-1955
S/N 30000 thru 32150
Complete Cable Kit P/N CCKT180-01G (Galvanized)
Complete Cable Kit P/N CCKT180-01S (Stainless Steel)
Complete Pulley Kit P/N PULL-KT-24*

Qty	P/N	Galv SS	Location
2	MC0510105-26 or 126		Rudder Control
2	MC0510105-123 2		Tailwheel Steering
2	MC0510105-16 or 116		Aileron Direct
1	MC0510105-13 or 113		Aileron Carry Thru
1	MC0510105-24 or 124		Elevator Upper
1	MC0510105-25 or 125		Elevator Lower
2	MC0510105-28 or 128		Stabilator Trim Forward
2	MC0510105-29 or 129		Stabilator Trim Aft
2	MC0510105-59 or 159		Flap Direct Outboard
2	MC0510105-60 or 160		Flap Return Outboard
1	MC0510105-63 or 163		Flap Return Inboard LH
1	MC0510105-64 or 164		Flap Return Inboard RH
1	MC0510105-61 or 161		Flap Direct Inboard LH
1	MC0510105-62 or 162		Flap Direct Inboard RH
1	MC0510105-21 or 121		Flap Return Forward
1	MC0510105-22 or 122		Flap Direct Forward
1	MC0510105-70 or 170		Parking Brake
1	MC0432138-2		Chain Trim Forward
1	MCS2295-25-185		Chain Stab Trim Aft
4	MCS2294-25		Chain Connecting Link
4	MC0422280		Aileron Bellcrank Bushing

180 1,A 1956-1958
S/N 32151 thru 50355
Complete Cable Kit P/N CCKT180-02G (Galvanized)
Complete Cable Kit P/N CCKT180-02S (Stainless Steel)
Complete Pulley Kit P/N PULL-KT-24*

Qty	P/N	Galv SS	Location
1	MC0510105-51 or 151		Rudder Forward LH
1	MC0510105-71 or 171		Rudder Forward RH
2	MC0510105-52 or 152		Rudder Aft
2	MC0510105-153 2		Tailwheel Steering
2	MC0510105-16 or 116		Aileron Direct
1	MC0510105-13 or 113		Aileron Carry Thru
1	MC0510105-24 or 124		Elevator Upper
1	MC0510105-25 or 125		Elevator Lower
2	MC0510105-28 or 128		Stabilator Trim Forward
2	MC0510105-29 or 129		Stabilator Trim Aft
2	MC0510105-59 or 159		Flap Direct Outboard
2	MC0510105-60 or 160		Flap Return Outboard
1	MC0510105-63 or 163		Flap Return Inboard LH
1	MC0510105-64 or 164		Flap Return Inboard RH
1	MC0510105-61 or 161		Flap Direct Inboard LH
1	MC0510105-62 or 162		Flap Direct Inboard RH
1	MC0510105-21 or 121		Flap Return Forward
1	MC0510105-22 or 122		Flap Direct Forward
1	MC0510105-70 or 170		Parking Brake
1	MC0432138-2		Chain Trim Forward
1	MCS2295-25-185		Chain Stab Trim Aft
4	MCS2294-25		Chain Connecting Link
4	MC0422280		Aileron Bellcrank Bushing

Available separately for aircraft with camera option

1	MC0510105-128		Stabilizer Trim with Camera
1	MC0510105-167		Rudder LH with Camera
1	MC0510105-168		Rudder RH with Camera
1	MC0510105-131		Elevator Up with Camera
1	MC0510105-132		Elevator Down with Camera

180B 1959
S/N 50356 thru 50661
Complete Cable Kit P/N CCKT180-13G (Galvanized)
Complete Cable Kit P/N CCKT180-13S (Stainless Steel)
Complete Pulley Kit P/N PULL-KT-24*

Qty	P/N	Galv SS	Location
1	MC0510105-51 or 151		Rudder Forward LH
1	MC0510105-71 or 171		Rudder Forward RH
2	MC0510105-52 or 152		Rudder Aft
2	MC0510105-153 2		Tailwheel Steering
2	MC0510105-16 or 116		Aileron Direct
1	MC0510105-13 or 113		Aileron Carry Thru
1	MC0510105-24 or 124		Elevator Upper
1	MC0510105-25 or 125		Elevator Lower
2	MC0510105-28 or 128		Stabilator Trim Forward
2	MC0510105-29 or 129		Stabilator Trim Aft
2	MC0510105-59 or 159		Flap Direct Outboard
2	MC0510105-60 or 160		Flap Return Outboard
1	MC0510105-63 or 163		Flap Return Inboard LH
1	MC0510105-64 or 164		Flap Return Inboard RH
1	MC0510105-61 or 161		Flap Direct Inboard LH
1	MC0510105-62 or 162		Flap Direct Inboard RH
1	MC0510105-21 or 121		Flap Return Forward
1	MC0510105-22 or 122		Flap Direct Forward
1	MC0510105-70 or 170		Parking Brake
1	MC0713070-28 2		Cable Assembly Park Brake
1	MC0432138-2		Chain Trim Forward
1	MCS2295-25-185		Chain Stab Trim Aft
4	MCS2294-25		Chain Connecting Link
4	MC0422280		Aileron Bellcrank Bushing

Available separately for aircraft with camera option

1	MC0510105-128		Stabilizer Trim with Camera
1	MC0510105-167		Rudder LH with Camera
1	MC0510105-168		Rudder RH with Camera
1	MC0510105-131		Elevator Up with Camera
1	MC0510105-132		Elevator Down with Camera

180C 1 1960 1
S/N 50662 thru 50744, 50746 thru 50747
Complete Cable Kit P/N CCKT180-03G (Galvanized)
Complete Cable Kit P/N CCKT180-03S (Stainless Steel)
Complete Pulley Kit P/N PULL-KT-25*

Qty	P/N	Galv SS	Location
1	MC0510105-51 or 151		Rudder Forward LH
1	MC0510105-71 or 171		Rudder Forward RH
2	MC0510105-52 or 152		Rudder Aft
2	MC0510105-153 2		Tailwheel Steering
2	MC0510105-16 or 116		Aileron Direct
1	MC0510105-13 or 113		Aileron Carry Thru
1	MC0510105-24 or 124		Elevator Upper
1	MC0510105-25 or 125		Elevator Lower
1	MC0510105-79 or 179		Elevator Trim
2	MC0510105-28 or 128		Stabilator Trim Forward
2	MC0510105-29 or 129		Stabilator Trim Aft
2	MC0510105-59 or 159		Flap Direct Outboard
2	MC0510105-60 or 160		Flap Return Outboard
1	MC0510105-63 or 163		Flap Return Inboard LH
1	MC0510105-64 or 164		Flap Return Inboard RH
1	MC0510105-61 or 161		Flap Direct Inboard LH
1	MC0510105-62 or 162		Flap Direct Inboard RH
1	MC0510105-21 or 121		Flap Return Forward
1	MC0510105-22 or 122		Flap Direct Forward
1	MC0510105-70 or 170		Parking Brake
1	MC0713070-28 2		Cable Assembly Park Brake
1	MC0432138-2		Chain Trim Forward
1	MCS2295-25-185		Chain Stab Trim Aft
4	MCS2294-25		Chain Connecting Link
4	MC0422280		Aileron Bellcrank Bushing

Available separately for aircraft with camera option

1	MC0510105-128		Stabilizer Trim with Camera
1	MC0510105-167		Rudder LH with Camera
1	MC0510105-168		Rudder RH with Camera
1	MC0510105-131		Elevator Up with Camera
1	MC0510105-132		Elevator Down with Camera

180C 1 D,E,F,G 1 1960 1-1964 1
S/N 50745, 50748 thru 18051410
Complete Cable Kit P/N CCKT180-04G (Galvanized)
Complete Cable Kit P/N CCKT180-04S (Stainless Steel)
Complete Pulley Kit P/N PULL-KT-25* or -26* Note 1

Qty	P/N	Galv SS	Location
1	MC0510105-51 or 151		Rudder Forward LH
1	MC0510105-71 or 171		Rudder Forward RH
2	MC0510105-52 or 152		Rudder Aft
2	MC0510105-153 2		Tailwheel Steering
2	MC0510105-16 or 116		Aileron Direct
1	MC0510105-13 or 113		Aileron Carry Thru
1	MC0510105-24 or 124		Elevator Upper
1	MC0510105-25 or 125		Elevator Lower
1	MC0510105-82 or 182		Elevator Trim
2	MC0510105-28 or 128		Stabilator Trim Forward
2	MC0510105-29 or 129		Stabilator Trim Aft
2	MC0510105-59 or 159		Flap Direct Outboard
2	MC0510105-60 or 160		Flap Return Outboard
1	MC0510105-63 or 163		Flap Return Inboard LH
1	MC0510105-64 or 164		Flap Return Inboard RH

Kit continues in next column

Continued from previous column

Qty	P/N	Galv SS	Location
1	MC0510105-61 or 161		Flap Direct Inboard LH
1	MC0510105-62 or 162		Flap Direct Inboard RH
1	MC0510105-21 or 121		Flap Return Forward
1	MC0510105-22 or 122		Flap Direct Forward
1	MC0510105-70 or 170		Parking Brake
1	MC0713070-28 2		Cable Assembly Park Brake
1	MC0432138-2		Chain Trim Forward
1	MCS2295-25-185		Chain Stab Trim Aft
4	MCS2294-25		Chain Connecting Link
4	MC0422280		Aileron Bellcrank Bushing

Available separately for aircraft with camera option

1	MC0510105-128		Stabilizer Trim with Camera
1	MC0510105-167		Rudder LH with Camera
1	MC0510105-168		Rudder RH with Camera
1	MC0510105-131		Elevator Up with Camera
1	MC0510105-132		Elevator Down with Camera

Note 1: S/N 50745, 50748 thru 18051183 USE PULL-KT-25
S/N 18051184 thru 18051410 USE PULL-KT-26

180G 1 1964 1
S/N 18051411 thru 18051445
Complete Cable Kit P/N CCKT180-05G (Galvanized)
Complete Cable Kit P/N CCKT180-05S (Stainless Steel)
Complete Pulley Kit P/N PULL-KT-26*

Qty	P/N	Galv SS	Location
1	MC0510105-51 or 151		Rudder Forward LH
1	MC0510105-71 or 171		Rudder Forward RH
2	MC0510105-52 or 152		Rudder Aft
1	MC0510105-73 or 173		Rudder Bar Tie
2	MC0510105-323 2		Tailwheel Steering
2	MC0510105-16 or 116		Aileron Direct
1	MC0510105-13 or 113		Aileron Carry Thru
1	MC0510105-24 or 124		Elevator Upper
1	MC0510105-25 or 125		Elevator Lower
1	MC0510105-82 or 182		Elevator Trim
2	MC0510105-28 or 128		Stabilator Trim Forward
2	MC0510105-29 or 129		Stabilator Trim Aft
2	MC0510105-59 or 159		Flap Direct Outboard
2	MC0510105-60 or 160		Flap Return Outboard
1	MC0510105-63 or 163		Flap Return Inboard LH
1	MC0510105-64 or 164		Flap Return Inboard RH
1	MC0510105-61 or 161		Flap Direct Inboard LH
1	MC0510105-62 or 162		Flap Direct Inboard RH
1	MC0510105-21 or 121		Flap Return Forward
1	MC0510105-22 or 122		Flap Direct Forward
1	MC0510105-70 or 170		Parking Brake
1	MC0713070-28 2		Cable Assembly Park Brake
1	MC0432138-2		Chain Trim Forward
1	MCS2295-25-185		Chain Stab Trim Aft
4	MCS2294-25		Chain Connecting Link
4	MC0422280		Aileron Bellcrank Bushing

Available separately for aircraft with camera option

1	MC0510105-128		Stabilizer Trim with Camera
1	MC0510105-167		Rudder LH with Camera
1	MC0510105-168		Rudder RH with Camera
1	MC0510105-131		Elevator Up with Camera
1	MC0510105-132		Elevator Down with Camera

180H 1 1965
S/N 18051446 thru 18051607
Complete Cable Kit P/N CCKT180-06G (Galvanized)
Complete Cable Kit P/N CCKT180-06S (Stainless Steel)
Complete Pulley Kit P/N PULL-KT-27*

Qty	P/N	Galv SS	Location
1	MC0510105-51 or 151		Rudder Forward LH
1	MC0510105-71 or 171		Rudder Forward RH
2	MC0510105-52 or 152		Rudder Aft
1	MC0510105-73 or 173		Rudder Bar Tie
2	MC0510105-323 2		Tailwheel Steering
2	MC0510105-222 or 322		Aileron Direct
1	MC0510105-13 or 113		Aileron Carry Thru
1	MC0510105-215 or 315		Aileron Yoke LH
1	MC0510105-214 or 314		Aileron Yoke RH
1	MC0510105-213 or 313		Aileron Yoke Primary
1	MC0510105-216 or 316		Aileron Yoke Transition
1	MC0510105-24 or 124		Elevator Upper
1	MC0510105-25 or 125		Elevator Lower
1	MC0510105-82 or 182		Elevator Trim
2	MC0510105-28 or 128		Stabilator Trim Forward
2	MC0510105-29 or 129		Stabilator Trim Aft
2	MC0510105-59 or 159		Flap Direct Outboard
2	MC0510105-60 or 160		Flap Return Outboard
1	MC0510105-63 or 163		Flap Return Inboard LH
1	MC0510105-64 or 164		Flap Return Inboard RH
1	MC0510105-61 or 161		Flap Direct Inboard LH
1	MC0510105-62 or 162		Flap Direct Inboard RH
1	MC0510105-21 or 121		Flap Return Forward
1	MC0510105-22 or 122		Flap Direct Forward
1	MC0510105-70 or 170		Parking Brake

Kit continues on next page

*** See pages 107-108 for Pulley Kit Components**
1 Partial model eligibility
2 Included in both galvanized and stainless kits.
6 Due to inconsistency in OEM parts these flap cables should be replaced at the same time.

Continued from previous page

Qty	P/N	Galv	SS	Location
Available separately for aircraft with camera option				
1	MC0510105-128			Stabilizer Trim with Camera
1	MC0510105-167			Rudder LH with Camera
1	MC0510105-168			Rudder RH with Camera
1	MC0510105-131			Elevator Up with Camera
1	MC0510105-132			Elevator Down with Camera
1	MC0432138-2			Chain Trim Forward
1	MCS2295-25-185			Chain Stab Trim Aft
4	MCS2294-25			Chain Connecting Link
4	MC0422280			Aileron Bellcrank Bushing

180H[1] 1966-1971[1]
S/N 18051608 thru 18052206
Complete Cable Kit P/N CCKT180-07G (Galvanized)
Complete Cable Kit P/N CCKT180-07S (Stainless Steel)
Complete Pulley Kit P/N PULL-KT-28*

Qty	P/N	Galv	SS	Location
1	MC0510105-51 or 151			Rudder Forward LH
1	MC0510105-71 or 171			Rudder Forward RH
2	MC0510105-52 or 152			Rudder Aft
1	MC0510105-73 or 173			Rudder Bar Tie
2	MC0510105-323[2]			Tailwheel Steering
2	MC0510105-222 or 322			Aileron Direct
1	MC0510105-13 or 113			Aileron Carry Thru
1	MC0510105-215 or 315			Aileron Yoke LH
1	MC0510105-214 or 314			Aileron Yoke RH
1	MC0510105-213 or 313			Aileron Yoke Primary
1	MC0510105-216 or 316			Aileron Yoke Transition
1	MC0510105-24 or 124			Elevator Upper
1	MC0510105-25 or 125			Elevator Lower
1	MC0510105-82 or 182			Elevator Trim
2	MC0510105-28 or 128			Stabilator Trim Forward
2	MC0510105-29 or 129			Stabilator Trim Aft
2	MC0510105-225 or 325			Flap Direct Outboard
2	MC0510105-60 or 160			Flap Return Outboard
1	MC0510105-63 or 163			Flap Return Inboard LH
1	MC0510105-64 or 164			Flap Return Inboard RH
1	MC0510105-227 or 327			Flap Direct Inboard LH
1	MC0510105-226 or 326			Flap Direct Inboard RH
1	MC0510105-21 or 121			Flap Return Forward
1	MC0510105-22 or 122			Flap Direct Forward
1	MC0510105-70 or 170			Parking Brake
1	MC0432138-2			Chain Trim Forward
1	MCS2295-25-185			Chain Stab Trim Aft
4	MCS2294-25			Chain Connecting Link
4	MC0422280			Aileron Bellcrank Bushing
Available separately for aircraft with camera option				
1	MC0510105-128			Stabilizer Trim with Camera
1	MC0510105-167			Rudder LH with Camera
1	MC0510105-168			Rudder RH with Camera
1	MC0510105-131			Elevator Up with Camera
1	MC0510105-132			Elevator Down with Camera

180H[1], J[1] 1971[1]-1973[1]
S/N 18052207 thru 18052331
Complete Cable Kit P/N CCKT180-08G (Galvanized)
Complete Cable Kit P/N CCKT180-08S (Stainless Steel)
Complete Pulley Kit P/N PULL-KT-83*

Qty	P/N	Galv	SS	Location
1	MC0510105-51 or 151			Rudder Forward LH
1	MC0510105-71 or 171			Rudder Forward RH
2	MC0510105-52 or 152			Rudder Aft
1	MC0510105-73 or 173			Rudder Bar Tie
2	MC0510105-323[2]			Tailwheel Steering
2	MC0510105-222 or 322			Aileron Direct
1	MC0510105-13 or 113			Aileron Carry Thru
1	MC0510105-215 or 315			Aileron Yoke LH
1	MC0510105-214 or 314			Aileron Yoke RH
1	MC0510105-213 or 313			Aileron Yoke Primary
1	MC0510105-216 or 316			Aileron Yoke Transition
1	MC0510105-24 or 124			Elevator Upper
1	MC0510105-25 or 125			Elevator Lower
1	MC0510105-82 or 182			Elevator Trim
2	MC0510105-28 or 128			Stabilator Trim Forward
2	MC0510105-29 or 129			Stabilator Trim Aft
2	MC0510105-225 or 325			Flap Direct Outboard
2	MC0510105-60 or 160			Flap Return Outboard
1	MC0510105-63 or 163			Flap Return Inboard LH
1	MC0510105-64 or 164			Flap Return Inboard RH
1	MC0510105-227 or 327			Flap Direct Inboard LH
1	MC0510105-226 or 326			Flap Direct Inboard RH
1	MC0510105-21 or 121			Flap Return Forward
1	MC0510105-22 or 122			Flap Direct Forward
1	MC0510105-232[2]			Parking Brake
1	MC0432138-2			Chain Trim Forward
1	MCS2295-25-185			Chain Stab Trim Aft
4	MCS2294-25			Chain Connecting Link
4	MC0422280			Aileron Bellcrank Bushing
Available separately for aircraft with camera option				
1	MC0510105-128			Stabilizer Trim with Camera
1	MC0510105-167			Rudder LH with Camera
1	MC0510105-168			Rudder RH with Camera
1	MC0510105-131			Elevator Up with Camera
1	MC0510105-132			Elevator Down with Camera

180J[1] 1973[1]
S/N 18052332 thru 18052384
Complete Cable Kit P/N CCKT180-09G (Galvanized)
Complete Cable Kit P/N CCKT180-09S (Stainless Steel)
Complete Pulley Kit P/N PULL-KT-83*

Qty	P/N	Galv	SS	Location
1	MC0510105-71 or 171			Rudder Forward LH
1	MC0510105-237 or 337			Rudder Forward RH
2	MC0510105-52 or 152			Rudder Aft
1	MC0510105-73 or 173			Rudder Bar Tie
2	MC0510105-323[2]			Tailwheel Steering
2	MC0510105-222 or 322			Aileron Direct
1	MC0510105-13 or 113			Aileron Carry Thru
1	MC0510105-215 or 315			Aileron Yoke LH
1	MC0510105-214 or 314			Aileron Yoke RH
1	MC0510105-213 or 313			Aileron Yoke Primary
1	MC0510105-216 or 316			Aileron Yoke Transition
1	MC0510105-24 or 124			Elevator Upper
1	MC0510105-25 or 125			Elevator Lower
1	MC0510105-82 or 182			Elevator Trim
2	MC0510105-28 or 128			Stabilator Trim Forward
2	MC0510105-29 or 129			Stabilator Trim Aft
2	MC0510105-225 or 325			Flap Direct Outboard
2	MC0510105-60 or 160			Flap Return Outboard
1	MC0510105-63 or 163			Flap Return Inboard LH
1	MC0510105-64 or 164			Flap Return Inboard RH
1	MC0510105-227 or 327			Flap Direct Inboard LH
1	MC0510105-226 or 326			Flap Direct Inboard RH
1	MC0510105-21 or 121			Flap Return Forward
1	MC0510105-22 or 122			Flap Direct Forward
1	MC0510105-232[2]			Parking Brake
1	MC0432138-2			Chain Stab Trim Forward
1	MCS2295-25-185			Chain Stab Trim Aft
4	MCS2294-25			Chain Connecting Link
4	MC0422280			Bellcrank Aileron Bushing
Available separately for aircraft with camera option				
1	MC0510105-128			Stabilizer Trim with Camera
1	MC0510105-167			Rudder LH with Camera
1	MC0510105-168			Rudder RH with Camera
1	MC0510105-131			Elevator Up with Camera
1	MC0510105-132			Elevator Down with Camera

180J[1] 1974-1976
S/N 18052385 thru 18052770
Complete Cable Kit P/N CCKT180-12G (Galvanized)
Complete Cable Kit P/N CCKT180-12S (Stainless Steel)
Complete Pulley Kit P/N PULL-KT-29*

Qty	P/N	Galv	SS	Location
1	MC0510105-71 or 171			Rudder Forward LH
1	MC0510105-237 or 337			Rudder Forward RH
2	MC0510105-52 or 152			Rudder Aft
1	MC0510105-73 or 173			Rudder Bar Tie
2	MC0510105-323[2]			Tailwheel Steering
2	MC0510105-222 or 322			Aileron Direct
1	MC0510105-13 or 113			Aileron Carry Thru
1	MC0510105-215 or 315			Aileron Yoke LH
1	MC0510105-214 or 314			Aileron Yoke RH
1	MC0510105-213 or 313			Aileron Yoke Primary
1	MC0510105-216 or 316			Aileron Yoke Transition
1	MC0510105-24 or 124			Elevator Upper
1	MC0510105-25 or 125			Elevator Lower
1	MC0510105-82 or 182			Elevator Trim
2	MC0510105-28 or 128			Stabilator Trim Forward
2	MC0510105-29 or 129			Stabilator Trim Aft
2	MC0510105-225 or 325			Flap Direct Outboard
2	MC0510105-60 or 160			Flap Return Outboard
1	MC0510105-63 or 163			Flap Return Inboard LH
1	MC0510105-64 or 164			Flap Return Inboard RH
1	MC0510105-227 or 327			Flap Direct Inboard LH
1	MC0510105-226 or 326			Flap Direct Inboard RH
1	MC0510105-21 or 121			Flap Return Forward
1	MC0510105-22 or 122			Flap Direct Forward
1	MC0510105-232[2]			Parking Brake
1	MC0432138-2			Chain Stab Trim Forward
1	MCS2295P25-185			Chain Stab Trim Aft
4	MCS2294-25			Chain Connecting Link
4	MC0422280			Bellcrank Aileron Bushing
Available separately for aircraft equipped with floats				
1	MC0742022-1[3]			Rudder Return
1	MC0742022-2[3]			Rudder Return

180K[1] 1977-1980
S/N 18052771 thru 18053167
Complete Cable Kit P/N CCKT180-10G (Galvanized)
Complete Cable Kit P/N CCKT180-10S (Stainless Steel)
Complete Pulley Kit P/N PULL-KT-29*

Qty	P/N	Galv	SS	Location
1	MC0510105-71 or 171			Rudder Forward LH
1	MC0510105-237 or 337			Rudder Forward RH
2	MC0510105-52 or 152			Rudder Aft
1	MC0510105-73 or 173			Rudder Bar Tie
2	MC0760135-106[2]			Tailwheel Steering
1	MC0510105-394[2]			Tailwheel Lock
2	MC0510105-222 or 322			Aileron Direct
1	MC0510105-13 or 113			Aileron Carry Thru

Kit continues in next column

Continued from previous column

Qty	P/N	Galv	SS	Location
1	MC0760135-8 or 108			Aileron Yoke Primary
1	MC0510105-215 or 315			Aileron Yoke LH
1	MC0510105-214 or 314			Aileron Yoke RH
1	MC0510105-216 or 316			Aileron Yoke Transition
1	MC0510105-24 or 124			Elevator Upper
1	MC0510105-25 or 125			Elevator Lower
1	MC0510105-82 or 182			Elevator Trim
2	MC0510105-28 or 128			Stabilator Trim Forward
2	MC0510105-29 or 129			Stabilator Trim Aft
2	MC0510105-225 or 325			Flap Direct Outboard
2	MC0510105-60 or 160			Flap Return Outboard
1	MC0510105-63 or 163			Flap Return Inboard LH
1	MC0510105-64 or 164			Flap Return Inboard RH
1	MC0510105-227 or 327			Flap Direct Inboard LH
1	MC0510105-226 or 326			Flap Direct Inboard RH
1	MC0510105-21 or 121			Flap Return Forward
1	MC0510105-22 or 122			Flap Direct Forward
1	MC0510105-232[2]			Parking Brake
1	MCS2295P25-321			Chain Stab Trim Forward
1	MCS2295P25-185			Chain Stab Trim Aft
4	MCS2294-25			Chain Connecting Link
4	MC0422280			Bellcrank Aileron Bushing
Available separately for aircraft equipped with floats				
1	MC0742022-1			Rudder Return
1	MC0742022-2			Rudder Return

180K[1] 1981
S/N 18053168 thru 18053203
Complete Cable Kit P/N CCKT180-11G (Galvanized)
Complete Cable Kit P/N CCKT180-11S (Stainless Steel)
Complete Pulley Kit P/N PULL-KT-29*

Qty	P/N	Galv	SS	Location
1	MC0510105-71 or 171			Rudder Forward LH
1	MC0510105-237 or 337			Rudder Forward RH
2	MC0510105-52 or 152			Rudder Aft
1	MC0510105-73 or 173			Rudder Bar Tie
2	MC0760135-106[2]			Tailwheel Steering
1	MC0510105-394[2]			Tailwheel Lock
2	MC0510105-222 or 322			Aileron Direct
1	MC0510105-13 or 113			Aileron Carry Thru
1	MC0760135-8 or 108			Aileron Yoke Primary
1	MC0510105-215 or 315			Aileron Yoke LH
1	MC0510105-214 or 314			Aileron Yoke RH
1	MC0510105-216 or 316			Aileron Yoke Transition
1	MC0510105-24 or 124			Elevator Upper
1	MC0510105-25 or 125			Elevator Lower
1	MC0510105-82 or 182			Elevator Trim
2	MC0510105-28 or 128			Stabilator Trim Forward
2	MC0510105-29 or 129			Stabilator Trim Aft
2	MC0510105-225 or 325			Flap Direct Outboard
2	MC0510105-60 or 160			Flap Return Outboard
1	MC0510105-63 or 163			Flap Return Inboard LH
1	MC0510105-64 or 164			Flap Return Inboard RH
1	MC0510105-227 or 327			Flap Direct Inboard LH
1	MC0510105-226 or 326			Flap Direct Inboard RH
1	MC0510105-21 or 121			Flap Return Forward
1	MC0510105-22 or 122			Flap Direct Forward
1	MC0510105-278[2]			Parking Brake
1	MCS2295P25-321			Chain Stab Trim Forward
1	MCS2295P25-185			Chain Stab Trim Aft
4	MCS2294-25			Chain Connecting Link
4	MC0422280			Bellcrank Aileron Bushing
Available separately for aircraft equipped with floats				
1	MC0742022-1			Rudder Return
1	MC0742022-2			Rudder Return

182,A 1956-1958
S/N 33000 thru 51556
Complete Cable Kit P/N CCKT182-01G (Galvanized)
Complete Cable Kit P/N CCKT182-01S (Stainless Steel)
Complete Pulley Kit P/N PULL-KT-34*

Qty	P/N	Galv	SS	Location
1	MC0510105-26 or 126			Rudder Control LH
1	MC0510105-66 or 166			Rudder Control RH
1	MC0510105-73 or 173			Rudder Bar Tie
2	MC0510105-16 or 116			Aileron Direct
1	MC0510105-13 or 113			Aileron Carry Thru
2	MC0510105-28 or 128			Stabilator Trim Forward
2	MC0510105-29 or 129			Stabilator Trim Aft
1	MC0510105-24 or 124			Elevator Upper
1	MC0510105-25 or 125			Elevator Lower
1	MC0510105-79 or 179			Elevator Trim
2	MC0510105-59 or 159			Flap Direct Outboard
2	MC0510105-60 or 160			Flap Return Outboard
1	MC0510105-63 or 163			Flap Return Inboard LH
1	MC0510105-64 or 164			Flap Return Inboard RH
1	MC0510105-61 or 161			Flap Direct Inboard LH
1	MC0510105-62 or 162			Flap Direct Inboard RH
1	MC0510105-21 or 121			Flap Return Forward

Kit continues on the next page

*** See pages 107-108 for Pulley Kit Components**
[1] Partial model eligibility
[2] Included in both galvanized and stainless kits.
[3] S/N 18052501 thru 18052770 only

Continued from previous page

Qty	P/N	Galv SS	Location
1	MC0510105-22 or 122		Flap Direct Forward
1	MC0510105-70 or 170		Parking Brake
1	MC0432138-2		Chain Stab Trim Forward
1	MCS2295-25-185		Chain Stab Trim Aft
4	MCS2294-25		Chain Connecting Link
4	MC0422280		Bellcrank Aileron Bushing

182B 1959
S/N 51557 thru 52358
Complete Cable Kit P/N CCKT182-14G (Galvanized)
Complete Cable Kit P/N CCKT182-14S (Stainless Steel)
Complete Pulley Kit P/N PULL-KT-34*

Qty	P/N	Galv SS	Location
1	MC0510105-26 or 126		Rudder Control LH
1	MC0510105-66 or 166		Rudder Control RH
1	MC0510105-73 or 173		Rudder Bar Tie
2	MC0510105-16 or 116		Aileron Direct
1	MC0510105-13 or 113		Aileron Carry Thru
2	MC0510105-28 or 128		Stabilator Trim Forward
2	MC0510105-29 or 129		Stabilator Trim Aft
1	MC0510105-24 or 124		Elevator Upper
1	MC0510105-25 or 125		Elevator Lower
1	MC0510105-79 or 179		Elevator Trim
2	MC0510105-59 or 159		Flap Direct Outboard
2	MC0510105-60 or 160		Flap Return Outboard
1	MC0510105-63 or 163		Flap Return Inboard LH
1	MC0510105-64 or 164		Flap Return Inboard RH
1	MC0510105-61 or 161		Flap Direct Inboard LH
1	MC0510105-62 or 162		Flap Direct Inboard RH
1	MC0510105-21 or 121		Flap Return Forward
1	MC0510105-22 or 122		Flap Direct Forward
1	MC0510105-70 or 170		Parking Brake
1	MC0432138-2		Chain Stab Trim Forward
1	MCS2295-25-185		Chain Stab Trim Aft
4	MCS2294-25		Chain Connecting Link
4	MC0422280		Bellcrank Aileron Bushing

182C[1] 1960[1]
S/N 52359 thru 52611 & 52613
Complete Cable Kit P/N CCKT182-02G (Galvanized)
Complete Cable Kit P/N CCKT182-02S (Stainless Steel)
Complete Pulley Kit P/N PULL-KT-35*

Qty	P/N	Galv SS	Location
1	MC0510105-77 or 177		Rudder Control LH
1	MC0510105-78 or 178		Rudder Control RH
2	MC1260105-9 or 109		Rudder Aft
1	MC0510105-73 or 173		Rudder Bar Tie
2	MC0510105-16 or 116		Aileron Direct
1	MC0510105-13 or 113		Aileron Carry Thru
1	MC0510105-24 or 124		Elevator Upper
1	MC0510105-25 or 125		Elevator Lower
1	MC0510105-79 or 179		Elevator Trim
2	MC0510105-28 or 128		Stabilator Trim Forward
2	MC0510105-29 or 129		Stabilator Trim Aft
2	MC0510105-59 or 159		Flap Direct Outboard
2	MC0510105-60 or 160		Flap Return Outboard
1	MC0510105-63 or 163		Flap Return Inboard LH
1	MC0510105-64 or 164		Flap Return Inboard RH
1	MC0510105-61 or 161		Flap Direct Inboard LH
1	MC0510105-62 or 162		Flap Direct Inboard RH
1	MC0510105-21 or 121		Flap Return Forward
1	MC0510105-22 or 122		Flap Direct Forward
1	MC0510105-70 or 170		Parking Brake
1	MC0713070-28[2]		Cable Assembly Park Brake
1	MC0432138-2		Chain Stab Trim Forward
1	MCS2295-25-185		Chain Stab Trim Aft
4	MCS2294-25		Chain Connecting Link
4	MC0422280		Bellcrank Aileron Bushing

182C[1],D 1960[1]-1961
S/N 52612, 52614 thru 53007
18253008 thru 18253598
Complete Cable Kit P/N CCKT182-03G (Galvanized)
Complete Cable Kit P/N CCKT182-03S (Stainless Steel)
Complete Pulley Kit P/N PULL-KT-35*

Qty	P/N	Galv SS	Location
1	MC0510105-77 or 177		Rudder Control LH
1	MC0510105-78 or 178		Rudder Control RH
2	MC1260105-9 or 109		Rudder Aft
1	MC0510105-73 or 173		Rudder Bar Tie
2	MC0510105-16 or 116		Aileron Direct
1	MC0510105-13 or 113		Aileron Carry Thru
1	MC0510105-24 or 124		Elevator Upper
1	MC0510105-25 or 125		Elevator Lower
1	MC0510105-82 or 182		Elevator Trim
2	MC0510105-28 or 128		Stabilator Trim Forward
2	MC0510105-29 or 129		Stabilator Trim Aft
2	MC0510105-59 or 159		Flap Direct Outboard
2	MC0510105-60 or 160		Flap Return Outboard
1	MC0510105-63 or 163		Flap Return Inboard LH
1	MC0510105-64 or 164		Flap Return Inboard RH
1	MC0510105-61 or 161		Flap Direct Inboard LH
1	MC0510105-62 or 162		Flap Direct Inboard RH
1	MC0510105-21 or 121		Flap Return Forward
1	MC0510105-22 or 122		Flap Direct Forward

Kit continues in the next column

Continued from previous column

Qty	P/N	Galv SS	Location
1	MC0510105-70 or 170		Parking Brake
1	MC0713070-28[2]		Cable Assembly Park Brake
1	MC0432138-2		Chain Stab Trim Forward
1	MCS2295-25-185		Chain Stab Trim Aft
4	MCS2294-25		Chain Connecting Link
4	MC0422280		Bellcrank Aileron Bushing

182E[1] 1962[1]
S/N 18253599 thru 18253929
Complete Cable Kit P/N CCKT182-04G (Galvanized)
Complete Cable Kit P/N CCKT182-04S (Stainless Steel)
Complete Pulley Kit P/N PULL-KT-36*

Qty	P/N	Galv SS	Location
1	MC0510105-77 or 177		Rudder Control LH
1	MC0510105-78 or 178		Rudder Control RH
2	MC1260105-9 or 109		Rudder Aft
2	MC0510105-95 or 195		Aileron Direct
1	MC0510105-13 or 113		Aileron Carry Thru
1	MC0510105-90 or 190		Elevator LH Yoke
1	MC0510105-89 or 189		Elevator RH Yoke
1	MC0510105-88 or 188		Elevator Down Spring
1	MC0510105-86 or 186		Elevator Trim Forward LH
1	MC0510105-97 or 197		Elevator Trim Forward RH
1	MC0510105-87 or 187		Elevator Trim Aft LH
1	MC0510105-98 or 198		Elevator Trim Aft RH
1	MC0510105-93 or 193[6]		Flap Retract
1	MC0510105-91 or 191		Flap Direct LH
1	MC0510105-94 or 194[6]		Flap Retract
1	MC0510105-92 or 192		Flap Direct RH
1	MC0510105-85[2]		Parking Brake
1	MCS2295-25-249		Elevator Trim Chain Forward
1	MCS2295P25-113		Elevator Trim Chain Aft
4	MCS2294-25		Chain Connecting Link
4	MC0422280		Bellcrank Aileron Bushing

182E[1],F,G 1962[1]-1964
S/N 18253930 thru 18255844
Complete Cable Kit P/N CCKT182-05G (Galvanized)
Complete Cable Kit P/N CCKT182-05S (Stainless Steel)
Complete Pulley Kit P/N PULL-KT-85*

Qty	P/N	Galv SS	Location
1	MC0510105-77 or 177		Rudder Control LH
1	MC0510105-78 or 178		Rudder Control RH
2	MC1260105-9 or 109		Rudder Aft
2	MC0510105-95 or 195		Aileron Direct
1	MC0510105-13 or 113		Aileron Carry Thru
1	MC0510105-90 or 190		Elevator LH Yoke
1	MC0510105-89 or 189		Elevator RH Yoke
1	MC0510105-88 or 188		Elevator Down Spring
1	MC0510105-201 or 301		Elevator Trim Forward LH
1	MC0510105-202 or 302		Elevator Trim Forward RH
1	MC0510105-87 or 187		Elevator Trim Aft LH
1	MC0510105-98 or 198		Elevator Trim Aft RH
1	MC0510105-93 or 193[6]		Flap Retract
1	MC0510105-91 or 191		Flap Direct LH
1	MC0510105-94 or 194[6]		Flap Retract
1	MC0510105-92 or 192		Flap Direct RH
1	MC0510105-85[2]		Parking Brake
1	MCS2295-25-67		Elevator Trim Chain Forward
1	MCS2295-25-71		Elevator Trim Chain Aft
4	MCS2294-25		Chain Connecting Link
4	MC0422280		Aileron Bellcrank Bushing

182H,J,K 1965-1967
S/N 18255845 thru 18258505
Complete Cable Kit P/N CCKT182-06G (Galvanized)
Complete Cable Kit P/N CCKT182-06S (Stainless Steel)
Complete Pulley Kit P/N PULL-KT-85* or -36* Note 1

Qty	P/N	Galv SS	Location
1	MC0510105-77 or 177		Rudder Control LH
1	MC0510105-78 or 178		Rudder Control RH
2	MC1260105-9 or 109		Rudder Aft
2	MC0510105-95 or 195		Aileron Direct
1	MC0510105-13 or 113		Aileron Carry Thru
1	MC0510105-90 or 190		Elevator LH Yoke
1	MC0510105-89 or 189		Elevator RH Yoke
1	MC0510105-201 or 301		Elevator Trim Forward LH
1	MC0510105-202 or 302		Elevator Trim Forward RH
1	MC0510105-87 or 187		Elevator Trim Aft LH
1	MC0510105-98 or 198		Elevator Trim Aft RH
1	MC0510105-93 or 193[6]		Flap Retract
1	MC0510105-91 or 191		Flap Direct LH
1	MC0510105-94 or 194[6]		Flap Retract
1	MC0510105-92 or 192		Flap Direct RH
1	MC0510105-85[2]		Parking Brake
1	MCS2295-25-67		Elevator Trim Chain Forward
1	MCS2295-25-71		Elevator Trim Chain Aft
4	MCS2294-25		Chain Connecting Link
4	MC0422280		Aileron Bellcrank Bushing

Note 1: S/N 18255845 thru 18257625 USE PULL-KT-85
S/N 18257626 thru 18258399 USE PULL-KT-36
S/N 18258400 thru 18558505 USE PULL-KT-85

182L,M,N,P[1] 1968-1973
S/N 18258506 thru 18262465
Complete Cable Kit P/N CCKT182-07G (Galvanized)
Complete Cable Kit P/N CCKT182-07S (Stainless Steel)
Complete Pulley Kit P/N PULL-KT-37*, -38*, -86* Note 1

Qty	P/N	Galv SS	Location
1	MC0510105-77 or 177		Rudder Control LH
1	MC0510105-78 or 178		Rudder Control RH
2	MC1260105-9 or 109		Rudder Aft
2	MC0510105-228 or 328		Aileron Direct
1	MC0510105-13 or 113		Aileron Carry Thru
1	MC1260078-3 or 103		Aileron Yoke RH
1	MC1260078-2 or 102		Aileron Yoke LH
1	MC0510105-90 or 190		Elevator LH Yoke
1	MC0510105-89 or 189		Elevator RH Yoke
1	MC0510105-201 or 301		Elevator Trim Forward LH
1	MC0510105-202 or 302		Elevator Trim Forward RH
1	MC0510105-87 or 187		Elevator Trim Aft LH
1	MC0510105-98 or 198		Elevator Trim Aft RH
1	MC0510105-93 or 193[6]		Flap Retract
1	MC0510105-91 or 191		Flap Direct LH
1	MC0510105-94 or 194[6]		Flap Retract
1	MC0510105-92 or 192		Flap Direct RH
1	MC0510105-85[2]		Parking Brake
1	MC1260078-5[2]		Aileron Drive Quadrant
1	MCS2295-25-67		Elevator Trim Chain Forward
1	MCS2295-25-71		Elevator Trim Chain Aft
4	MCS2294-25		Chain Connecting Link
4	MC0422280		Aileron Bellcrank Bushing

Note 1: S/N 18258506 thru 18260445 USE PULL-KT-37
S/N 18260446 thru 18260669 USE PULL-KT-38
S/N 18260670 thru 18262465 USE PULL-KT-86

182P[1],Q,R[1],T182,F182P,Q 1974- 1981[1]
S/N 18262466 thru 18267789,
F18200001 thru F18200169
Complete Cable Kit P/N CCKT182-08G (Galvanized)
Complete Cable Kit P/N CCKT182-08S (Stainless Steel)
Complete Pulley Kit P/N PULL-KT-39*

Qty	P/N	Galv SS	Location
1	MC0510105-77 or 177		Rudder Control LH
1	MC0510105-78 or 178		Rudder Control RH
2	MC1260105-9 or 109		Rudder Aft
2	MC0510105-228 or 328		Aileron Direct
1	MC0510105-13 or 113		Aileron Carry Thru
1	MC1260078-3 or 103		Aileron Yoke RH
1	MC1260078-2 or 102		Aileron Yoke LH
1	MC0510105-90 or 190		Elevator LH Yoke
1	MC0510105-89 or 189		Elevator RH Yoke
1	MC0510105-201 or 301		Elevator Trim Forward LH
1	MC0510105-202 or 302		Elevator Trim Forward RH
1	MC0510105-87 or 187		Elevator Trim Aft LH
1	MC0510105-98 or 198		Elevator Trim Aft RH
1	MC0510105-93 or 193[6]		Flap Retract
1	MC0510105-91 or 191		Flap Direct LH
1	MC0510105-94 or 194[6]		Flap Retract
1	MC0510105-92 or 192		Flap Direct RH
1	MC0510105-233 or 333		Parking Brake
1	MC1260078-5[2]		Aileron Drive Quadrant
1	MCS2295-25-67		Elevator Trim Chain Forward
1	MCS2295-25-71		Elevator Trim Chain Aft
4	MCS2294-25		Chain Connecting Link
4	MC0422280		Aileron Bellcrank Bushing

182R[1],T182[1] 1981[1]-1982
S/N 18267790 thru 18268293
Complete Cable Kit P/N CCKT182-09G (Galvanized)
Complete Cable Kit P/N CCKT182-09S (Stainless Steel)
Complete Pulley Kit P/N PULL-KT-39*

Qty	P/N	Galv SS	Location
1	MC0510105-77 or 177		Rudder Control LH
1	MC0510105-78 or 178		Rudder Control RH
2	MC1260105-9 or 109		Rudder Aft
2	MC0510105-228 or 328		Aileron Direct
1	MC0510105-13 or 113		Aileron Carry Thru
1	MC1260078-3 or 103		Aileron Yoke RH
1	MC1260078-2 or 102		Aileron Yoke LH
1	MC0510105-90 or 190		Elevator LH Yoke
1	MC0510105-89 or 189		Elevator RH Yoke
1	MC0510105-201 or 301		Elevator Trim Forward LH
1	MC0510105-202 or 302		Elevator Trim Forward RH
1	MC0510105-87 or 187		Elevator Trim Aft LH
1	MC0510105-98 or 198		Elevator Trim Aft RH
1	MC0510105-93 or 193[6]		Flap Retract
1	MC0510105-91 or 191		Flap Direct LH
1	MC0510105-94 or 194[6]		Flap Retract
1	MC0510105-92 or 192		Flap Direct RH
1	MC0510105-279[2]		Parking Brake
1	MC1260078-5[2]		Aileron Drive Quadrant
1	MCS2295-25-67		Elevator Trim Chain Forward
1	MCS2295-25-71		Elevator Trim Chain Aft
4	MCS2294-25		Chain Connecting Link
4	MC0422280		Bellcrank Aileron Bushing

*** See pages 107-108 for Pulley Kit Components**
[1] Partial model eligibility
[2] Included in both galvanized and stainless kits.
[6] Due to inconsistency in OEM parts these flap cables should be replaced at the same time.

182R[1],T182[1] 1983-1986
S/N 18268294 thru 18268615
Complete Cable Kit P/N CCKT182-10G (Galvanized)
Complete Cable Kit P/N CCKT182-10S (Stainless Steel)
Complete Pulley Kit P/N PULL-KT-39*

Qty	P/N	Galv	SS	Location
1	MC0510105-77 or 177			Rudder Control LH
1	MC0510105-78 or 178			Rudder Control RH
2	MC1260105-9 or 109			Rudder Aft
2	MC0510105-228 or 328			Aileron Direct
1	MC0510105-13 or 113			Aileron Carry Thru
1	MC1260078-3 or 103			Aileron Yoke RH
1	MC1260078-2 or 102			Aileron Yoke LH
1	MC0510105-90 or 190			Elevator LH Yoke
1	MC0510105-89 or 189			Elevator RH Yoke
1	MC0510105-201 or 301			Elevator Trim Forward LH
1	MC0510105-202 or 302			Elevator Trim Forward RH
1	MC0510105-87 or 187			Elevator Trim Aft LH
1	MC0510105-98 or 198			Elevator Trim Aft RH
1	MC0510105-93 or 193	6		Flap Retract
1	MC0510105-91 or 191			Flap Direct LH
1	MC0510105-94 or 194	6		Flap Retract
1	MC0510105-92 or 192			Flap Direct RH
1	MC0510105-279	2		Parking Brake
1	MC1260078-5	2		Aileron Drive Quadrant
1	MCS2295P25-67			Elevator Trim Chain Forward
1	MCS2295P25-71			Elevator Trim Chain Aft
4	MCS2294-25			Chain Connecting Link
4	MC0422280			Bellcrank Aileron Bushing

R182[1],TR182[1],FR182 1978-1981[1]
S/N R18200001 thru R18201679,
FR18200001 thru FR18200070
Complete Cable Kit P/N CCKT182-11G (Galvanized)
Complete Cable Kit P/N CCKT182-11S (Stainless Steel)
Complete Pulley Kit P/N PULL-KT-40*

Qty	P/N	Galv	SS	Location
1	MC0510105-77 or 177			Rudder Control LH
1	MC0510105-78 or 178			Rudder Control RH
2	MC1260105-18 or 118			Rudder Aft
2	MC0510105-228 or 328			Aileron Direct
1	MC0510105-13 or 113			Aileron Carry Thru
1	MC0510105-250 or 350			Elevator LH Yoke
1	MC0510105-249 or 349			Elevator RH Yoke
1	MC0510105-245 or 345			Elevator Trim LH Forward
1	MC0510105-246 or 346			Elevator Trim RH Forward
1	MC0510105-247 or 347			Elevator Trim LH Aft
1	MC0510105-248 or 348			Elevator Trim RH Aft
1	MC0510105-93 or 193	6		Flap Retract
1	MC0510105-91 or 191			Flap Direct LH
1	MC0510105-94 or 194	6		Flap Retract
1	MC0510105-92 or 192			Flap Direct RH
1	MC0510105-233 or 333			Parking Brake
1	MCS2295P25-67			Elevator Trim Chain Forward
1	MCS2295P25-71			Elevator Trim Chain Aft
4	MCS2294-25			Chain Connecting Link
4	MC0422280			Bellcrank Aileron Bushing

R182[1],TR182[1] 1981[1]-1986
S/N R18201680 thru R18202041
Complete Cable Kit P/N CCKT182-12G (Galvanized)
Complete Cable Kit P/N CCKT182-12S (Stainless Steel)
Complete Pulley Kit P/N PULL-KT-40*

Qty	P/N	Galv	SS	Location
1	MC0510105-77 or 177			Rudder Control LH
1	MC0510105-78 or 178			Rudder Control RH
2	MC1260105-18 or 118			Rudder Aft
2	MC0510105-228 or 328			Aileron Direct
1	MC0510105-13 or 113			Aileron Carry Thru
1	MC0510105-250 or 350			Elevator LH Yoke
1	MC0510105-249 or 349			Elevator RH Yoke
1	MC0510105-245 or 345			Elevator Trim LH Forward
1	MC0510105-246 or 346			Elevator Trim RH Forward
1	MC0510105-247 or 347			Elevator Trim LH Aft
1	MC0510105-248 or 348			Elevator Trim RH Aft
1	MC0510105-93 or 193	6		Flap Retract
1	MC0510105-91 or 191			Flap Direct LH
1	MC0510105-94 or 194	6		Flap Retract
1	MC0510105-92 or 192			Flap Direct RH
1	MC0510105-279	2		Parking Brake
1	MCS2295P25-67			Elevator Trim Chain Forward
1	MCS2295P25-71			Elevator Trim Chain Aft
4	MCS2294-25			Chain Connecting Link
4	MC0422280			Bellcrank Aileron Bushing

182S,182T, T182T 1997 and On
S/N 18280001 and On, T18208001 and On
Complete Cable Kit P/N CCKT182-13G (Galvanized)
Complete Cable Kit P/N CCKT182-13S (Stainless Steel)
Complete Pulley Kit P/N PULL-KT-80*

Qty	P/N	Galv	SS	Location
1	MC0510105-77 or 177			Rudder Control LH
1	MC0510105-78 or 178			Rudder Control RH
2	MC1260105-9 or 109			Rudder Aft
2	MC0510105-228 or 328			Aileron Direct
1	MC0510105-13 or 113			Aileron Carry Thru
1	MC0510105-90 or 190			Elevator LH Yoke
1	MC0510105-89 or 189			Elevator RH Yoke

Kit continues in next column

Continued from previous column

Qty	P/N	Galv	SS	Location
1	MC0510105-201 or 301			Elevator Trim Forward LH
1	MC0510105-202 or 302			Elevator Trim Forward RH
1	MC0510105-87 or 187			Elevator Trim Aft LH
1	MC0510105-98 or 198			Elevator Trim Aft RH
1	MC0510105-93 or 193	6		Flap Retract
1	MC0510105-91 or 191			Flap Direct LH
1	MC0510105-94 or 194	6		Flap Retract
1	MC0510105-92 or 192			Flap Direct RH
1	MC1260078-5 or 105			Aileron Yoke Primary
1	MC1260078-7 or 107			Aileron Yoke LH
1	MC1260078-8 or 108			Aileron Yoke RH
1	MC0510105-279	2		Parking Brake
1	MCS2295P25-67			Elevator Trim Chain Forward
1	MCS2295P25-71			Elevator Trim Chain Aft
4	MCS2294-25			Chain Connecting Link
4	MC0422280			Bellcrank Aileron Bushing

185 1961
S/N 1850001 thru 1850237
Complete Cable Kit P/N CCKT185-01G (Galvanized)
Complete Cable Kit P/N CCKT185-01S (Stainless Steel)
Complete Pulley Kit P/N PULL-KT-30*

Qty	P/N	Galv	SS	Location
1	MC0510105-51 or 151			Rudder Forward LH
1	MC0510105-71 or 171			Rudder Forward RH
2	MC0510105-52 or 152			Rudder Aft
2	MC0510105-196	2		Tailwheel Steering
1	MC0510105-73 or 173			Rudder Trim
1	MC0510105-82 or 182			Elevator Trim
1	MC0510105-24 or 124			Elevator Upper
1	MC0510105-25 or 125			Elevator Lower
2	MC0510105-28 or 128			Stabilator Trim Forward
2	MC0510105-29 or 129			Stabilator Trim Aft
2	MC0510105-16 or 116			Aileron Direct
1	MC0510105-13 or 113			Aileron Carry Thru
2	MC0510105-59 or 159			Flap Direct Outboard
2	MC0510105-60 or 160			Flap Return Outboard
1	MC0510105-63 or 163			Flap Return Inboard LH
1	MC0510105-64 or 164			Flap Return Inboard RH
1	MC0510105-61 or 161			Flap Direct Inboard LH
1	MC0510105-62 or 162			Flap Direct Inboard RH
1	MC0510105-21 or 121			Flap Return Forward
1	MC0510105-22 or 122			Flap Direct Forward
1	MC0510105-70 or 170			Parking Brake
1	MC0713070-28	2		Cable Assembly Park Brake
1	MCS2295P25-321			Chain Stabilator Trim Fwd
1	MCS2295-25-185			Chain Stabilator Trim Aft
4	MCS2294-25			Chain Connecting Link
4	MC0422280			Bellcrank Aileron Bushing

185A,B,C[1] 1962-1964[1]
S/N 1850238 thru 1850768
Complete Cable Kit P/N CCKT185-02G (Galvanized)
Complete Cable Kit P/N CCKT185-02S (Stainless Steel)
Complete Pulley Kit P/N PULL-KT-30*

Qty	P/N	Galv	SS	Location
1	MC0510105-51 or 151			Rudder Forward LH
1	MC0510105-71 or 171			Rudder Forward RH
2	MC0510105-52 or 152			Rudder Aft
2	MC0510105-199	2		Tailwheel Steering
1	MC0510105-73 or 173			Rudder Trim
1	MC0510105-82 or 182			Elevator Trim
1	MC0510105-24 or 124			Elevator Upper
1	MC0510105-25 or 125			Elevator Lower
2	MC0510105-28 or 128			Stabilator Trim Forward
2	MC0510105-29 or 129			Stabilator Trim Aft
2	MC0510105-16 or 116			Aileron Direct
1	MC0510105-13 or 113			Aileron Carry Thru
2	MC0510105-59 or 159			Flap Direct Outboard
2	MC0510105-60 or 160			Flap Return Outboard
1	MC0510105-63 or 163			Flap Return Inboard LH
1	MC0510105-64 or 164			Flap Return Inboard RH
1	MC0510105-61 or 161			Flap Direct Inboard LH
1	MC0510105-62 or 162			Flap Direct Inboard RH
1	MC0510105-21 or 121			Flap Return Forward
1	MC0510105-22 or 122			Flap Direct Forward
1	MC0510105-70 or 170			Parking Brake
1	MC0713070-28	2		Cable Assembly Park Brake
1	MCS2295-25-185			Chain Stabilator Trim Aft
1	MCS2295P25-321			Chain Stabilator Trim Fwd
4	MCS2294-25			Chain Connecting Link
4	MC0422280			Bellcrank Aileron Bushing

185C[1] 1964[1]
S/N 1850769 thru 1850776
Complete Cable Kit P/N CCKT185-03G (Galvanized)
Complete Cable Kit P/N CCKT185-03S (Stainless Steel)
Complete Pulley Kit P/N PULL-KT-30*

Qty	P/N	Galv	SS	Location
1	MC0510105-51 or 151			Rudder Forward LH
1	MC0510105-71 or 171			Rudder Forward RH
2	MC0510105-52 or 152			Rudder Aft
2	MC0510105-323	2		Tailwheel Steering
1	MC0510105-73 or 173			Rudder Trim
1	MC0510105-82 or 182			Elevator Trim

Kit continues in next column

Continued from previous column

Qty	P/N	Galv	SS	Location
1	MC0510105-24 or 124			Elevator Upper
1	MC0510105-25 or 125			Elevator Lower
2	MC0510105-28 or 128			Stabilator Trim Forward
2	MC0510105-29 or 129			Stabilator Trim Aft
2	MC0510105-16 or 116			Aileron Direct
1	MC0510105-13 or 113			Aileron Carry Thru
2	MC0510105-59 or 159			Flap Direct Outboard
2	MC0510105-60 or 160			Flap Return Outboard
1	MC0510105-63 or 163			Flap Return Inboard LH
1	MC0510105-64 or 164			Flap Return Inboard RH
1	MC0510105-61 or 161			Flap Direct Inboard LH
1	MC0510105-62 or 162			Flap Direct Inboard RH
1	MC0510105-21 or 121			Flap Return Forward
1	MC0510105-22 or 122			Flap Direct Forward
1	MC0510105-70 or 170			Parking Brake
1	MC0713070-28	2		Cable Assembly Park Brake
1	MCS2295P25-321			Chain Stabilator Trim Fwd
1	MCS2295-25-185			Chain Stabilator Trim Aft
4	MCS2294-25			Chain Connecting Link
4	MC0422280			Bellcrank Aileron Bushing

185D 1965
S/N 1850777 thru 1850967
Complete Cable Kit P/N CCKT185-04G (Galvanized)
Complete Cable Kit P/N CCKT185-04S (Stainless Steel)
Complete Pulley Kit P/N PULL-KT-31*

Qty	P/N	Galv	SS	Location
1	MC0510105-51 or 151			Rudder Forward LH
1	MC0510105-71 or 171			Rudder Forward RH
2	MC0510105-52 or 152			Rudder Control Aft
2	MC0510105-323	2		Tailwheel Steering
1	MC0510105-73 or 173			Rudder Trim
1	MC0510105-82 or 182			Elevator Trim
1	MC0510105-24 or 124			Elevator Upper
1	MC0510105-25 or 125			Elevator Lower
2	MC0510105-28 or 128			Stabilator Trim Forward
2	MC0510105-29 or 129			Stabilator Trim Aft
1	MC0510105-215 or 315			Aileron Yoke LH
1	MC0510105-214 or 314			Aileron Yoke RH
1	MC0510105-213 or 313			Aileron Yoke Primary
1	MC0510105-216 or 316			Aileron Yoke Transition
2	MC0510105-222 or 322			Aileron Direct
1	MC0510105-13 or 113			Aileron Carry Thru
2	MC0510105-59 or 159			Flap Direct Outboard
2	MC0510105-60 or 160			Flap Return Outboard
1	MC0510105-63 or 163			Flap Return Inboard LH
1	MC0510105-64 or 164			Flap Return Inboard RH
1	MC0510105-61 or 161			Flap Direct Inboard LH
1	MC0510105-62 or 162			Flap Direct Inboard RH
1	MC0510105-21 or 121			Flap Return Forward
1	MC0510105-22 or 122			Flap Direct Forward
1	MC0510105-70 or 170			Parking Brake
1	MCS2295P25-321			Chain Stabilator Trim Fwd
1	MCS2295-25-185			Chain Stabilator Trim Aft
4	MCS2294-25			Chain Connecting Link
4	MC0422280			Bellcrank Aileron Bushing

185E,A185E[1] 1966-1971[1]
S/N 1850968 thru 18501901
Complete Cable Kit P/N CCKT185-05G (Galvanized)
Complete Cable Kit P/N CCKT185-05S (Stainless Steel)
Complete Pulley Kit P/N PULL-KT-32*

Qty	P/N	Galv	SS	Location
1	MC0510105-51 or 151			Rudder Forward LH
1	MC0510105-71 or 171			Rudder Forward RH
2	MC0510105-52 or 152			Rudder Aft
2	MC0510105-323	2		Tailwheel Steering
1	MC0510105-73 or 173			Rudder Trim
1	MC0510105-82 or 182			Elevator Trim
1	MC0510105-24 or 124			Elevator Upper
1	MC0510105-25 or 125			Elevator Lower
2	MC0510105-28 or 128			Stabilator Trim Forward
2	MC0510105-29 or 129			Stabilator Trim Aft
1	MC0510105-215 or 315			Aileron Yoke LH
1	MC0510105-214 or 314			Aileron Yoke RH
1	MC0510105-213 or 313			Aileron Yoke Primary
1	MC0510105-216 or 316			Aileron Yoke Transition
2	MC0510105-222 or 322			Aileron Direct
1	MC0510105-13 or 113			Aileron Carry Thru
2	MC0510105-225 or 325			Flap Direct Outboard
2	MC0510105-60 or 160			Flap Return Outboard
1	MC0510105-63 or 163			Flap Return Inboard LH
1	MC0510105-64 or 164			Flap Return Inboard RH
1	MC0510105-227 or 327			Flap Direct Inboard LH
1	MC0510105-226 or 326			Flap Direct Inboard RH
1	MC0510105-21 or 121			Flap Return Forward
1	MC0510105-22 or 122			Flap Direct Forward
1	MC0510105-70 or 170			Parking Brake
1	MCS2295P25-321			Chain Stabilator Trim Fwd
1	MCS2295-25-185			Chain Stabilator Trim Aft

Kit continues on next page

* See pages 107-108 for Pulley Kit Components
1 Partial model eligibility
2 Included in both galvanized and stainless kits.
6 Due to inconsistency in OEM parts these flap cables should be replaced at the same time.

Continued from previous page

Qty	P/N	Galv SS	Location
4	MCS2294-25		Chain Connecting Link
4	MC0422280		Bellcrank Aileron Bushing

A185E[1],A185F[1] 1971[1]-1973[1]
S/N 18501902 thru 18502206
Complete Cable Kit P/N CCKT185-06G (Galvanized)
Complete Cable Kit P/N CCKT185-06S (Stainless Steel)
Complete Pulley Kit P/N PULL-KT-84*

Qty	P/N	Galv SS	Location
1	MC0510105-51 or 151		Rudder Forward LH
1	MC0510105-71 or 171		Rudder Forward RH
2	MC0510105-52 or 152		Rudder Aft
2	MC0510105-323[2]		Tailwheel Steering
1	MC0510105-73 or 173		Rudder Trim
1	MC0510105-82 or 182		Elevator Trim
1	MC0510105-24 or 124		Elevator Upper
1	MC0510105-25 or 125		Elevator Lower
2	MC0510105-28 or 128		Stabilator Trim Forward
2	MC0510105-29 or 129		Stabilator Trim Aft
1	MC0510105-215 or 315		Aileron Yoke LH
1	MC0510105-214 or 314		Aileron Yoke RH
1	MC0510105-213 or 313		Aileron Yoke Primary
1	MC0510105-216 or 316		Aileron Yoke Transition
2	MC0510105-222 or 322		Aileron Direct
1	MC0510105-13 or 113		Aileron Carry Thru
2	MC0510105-225 or 325		Flap Direct Outboard
2	MC0510105-60 or 160		Flap Return Outboard
1	MC0510105-63 or 163		Flap Return Inboard LH
1	MC0510105-64 or 164		Flap Return Inboard RH
1	MC0510105-227 or 327		Flap Direct Inboard LH
1	MC0510105-226 or 326		Flap Direct Inboard RH
1	MC0510105-21 or 121		Flap Return Forward
1	MC0510105-22 or 122		Flap Direct Forward
1	MC0510105-232[2]		Parking Brake
1	MCS2295P25-321		Chain Stabilator Trim Fwd
1	MCS2295-25-185		Chain Stabilator Trim Aft
4	MCS2294-25		Chain Connecting Link
4	MC0422280		Bellcrank Aileron Bushing

A185F[1] 1973[1]
S/N 18502207 thru 18502310
Complete Cable Kit P/N CCKT185-11G (Galvanized)
Complete Cable Kit P/N CCKT185-11S (Stainless Steel)
Complete Pulley Kit P/N PULL-KT-84*

Qty	P/N	Galv SS	Location
1	MC0510105-51 or 151		Rudder Forward LH
1	MC0510105-237or 337		Rudder Forward RH
2	MC0510105-52 or 152		Rudder Aft
2	MC0510105-323[2]		Tailwheel Steering
1	MC0510105-73 or 173		Rudder Trim
1	MC0510105-82 or 182		Elevator Trim
1	MC0510105-24 or 124		Elevator Upper
1	MC0510105-25 or 125		Elevator Lower
2	MC0510105-28 or 128		Stabilator Trim Forward
2	MC0510105-29 or 129		Stabilator Trim Aft
1	MC0510105-215 or 315		Aileron Yoke LH
1	MC0510105-214 or 314		Aileron Yoke RH
1	MC0510105-213 or 313		Aileron Yoke Primary
1	MC0510105-216 or 316		Aileron Yoke Transition
2	MC0510105-222 or 322		Aileron Direct
1	MC0510105-13 or 113		Aileron Carry Thru
2	MC0510105-225 or 325		Flap Direct Outboard
2	MC0510105-60 or 160		Flap Return Outboard
1	MC0510105-63 or 163		Flap Return Inboard LH
1	MC0510105-64 or 164		Flap Return Inboard RH
1	MC0510105-227 or 327		Flap Direct Inboard LH
1	MC0510105-226 or 326		Flap Direct Inboard RH
1	MC0510105-21 or 121		Flap Return Forward
1	MC0510105-22 or 122		Flap Direct Forward
1	MC0510105-232[2]		Parking Brake
1	MCS2295P25-321		Chain Stabilator Trim Fwd
1	MCS2295-25-185		Chain Stabilator Trim Aft
4	MCS2294-25		Chain Connecting Link
4	MC0422280		Bellcrank Aileron Bushing

A185F[1] 1974-1976
S/N 18502311 thru 18503153
Complete Cable Kit P/N CCKT185-07G (Galvanized)
Complete Cable Kit P/N CCKT185-07S (Stainless Steel)
Complete Pulley Kit P/N PULL-KT-33*

Qty	P/N	Galv SS	Location
1	MC0510105-51 or 151		Rudder Forward LH
1	MC0510105-237 or 337		Rudder Forward RH
2	MC0510105-52 or 152		Rudder Control Aft
2	MC0510105-323[2]		Tailwheel Steering
1	MC0510105-73 or 173		Rudder Trim
1	MC0510105-82 or 182		Elevator Trim
1	MC0510105-24 or 124		Elevator Upper
1	MC0510105-25 or 125		Elevator Lower
2	MC0510105-28 or 128		Stabilator Trim Forward
2	MC0510105-29 or 129		Stabilator Trim Aft
1	MC0510105-215 or 315		Aileron Yoke LH
1	MC0510105-214 or 314		Aileron Yoke RH
1	MC0510105-213 or 313		Aileron Yoke Primary
1	MC0510105-216 or 316		Aileron Yoke Transition

Kit continues in next column

Continued from previous column

Qty	P/N	Galv SS	Location
2	MC0510105-222 or 322		Aileron Direct
1	MC0510105-13 or 113		Aileron Carry Thru
2	MC0510105-225 or 325		Flap Direct Outboard
2	MC0510105-60 or 160		Flap Return Outboard
1	MC0510105-63 or 163		Flap Return Inboard LH
1	MC0510105-64 or 164		Flap Return Inboard RH
1	MC0510105-227 or 327		Flap Direct Inboard LH
1	MC0510105-226 or 326		Flap Direct Inboard RH
1	MC0510105-21 or 121		Flap Return Forward
1	MC0510105-22 or 122		Flap Direct Forward
1	MC0510105-232[2]		Parking Brake
1	MCS2295P25-321		Chain Stabilator Trim Fwd
1	MCS2295P25-185		Chain Stabilator Trim Aft
4	MCS2294-25		Chain Connecting Link
4	MC0422280		Bellcrank Aileron Bushing
Available separately for aircraft equipped with floats			
1	MC0742022-1[3]		Rudder Return
1	MC0742022-2[3]		Rudder Return

185F[1] 1977-1980
S/N 18503154 thru 18504138
Complete Cable Kit P/N CCKT185-08G (Galvanized)
Complete Cable Kit P/N CCKT185-08S (Stainless Steel)
Complete Pulley Kit P/N PULL-KT-33*

Qty	P/N	Galv SS	Location
1	MC0510105-51 or 151		Rudder Forward LH
1	MC0510105-237 or 337		Rudder Forward RH
2	MC0510105-52 or 152		Rudder Control Aft
2	MC0760135-106[2]		Tailwheel Steering
1	MC0510105-394[2]		Tailwheel Lock
1	MC0510105-73 or 173		Rudder Trim
1	MC0510105-82 or 182		Elevator Trim
1	MC0510105-24 or 124		Elevator Upper
1	MC0510105-25 or 125		Elevator Lower
2	MC0510105-28 or 128		Stabilator Trim Forward
2	MC0510105-29 or 129		Stabilator Trim Aft
1	MC0510105-215 or 315		Aileron Yoke LH
1	MC0510105-214 or 314		Aileron Yoke RH
1	MC0760135-8 or 108		Aileron Yoke Primary
1	MC0510105-216 or 316		Aileron Yoke Transition
2	MC0510105-222 or 322		Aileron Direct
1	MC0510105-13 or 113		Aileron Carry Thru
2	MC0510105-225 or 325		Flap Direct Outboard
2	MC0510105-60 or 160		Flap Return Outboard
1	MC0510105-63 or 163		Flap Return Inboard LH
1	MC0510105-64 or 164		Flap Return Inboard RH
1	MC0510105-227 or 327		Flap Direct Inboard LH
1	MC0510105-226 or 326		Flap Direct Inboard RH
1	MC0510105-21 or 121		Flap Return Forward
1	MC0510105-22 or 122		Flap Direct Forward
1	MC0510105-232[2]		Parking Brake
1	MCS2295P25-321		Chain Stabilator Trim Fwd
1	MCS2295P25-185		Chain Stabilator Trim Aft
4	MCS2294-25		Chain Connecting Link
4	MC0422280		Bellcrank Aileron Bushing
Available separately for aircraft equipped with floats			
1	MC0742022-1		Rudder Return
1	MC0742022-2		Rudder Return

185F[1]1981[1]-1982[1]
S/N 18504139 thru 18504379, 18504381 thru 18504391
Complete Cable Kit P/N CCKT185-09G (Galvanized)
Complete Cable Kit P/N CCKT185-09S (Stainless Steel)
Complete Pulley Kit P/N PULL-KT-33*

Qty	P/N	Galv SS	Location
1	MC0510105-51 or 151		Rudder Forward LH
1	MC0510105-237 or 337		Rudder Forward RH
2	MC0510105-52 or 152		Rudder Control Aft
2	MC0760135-106[2]		Tailwheel Steering
1	MC0510105-394[2]		Tailwheel Lock
1	MC0510105-73 or 173		Rudder Trim
1	MC0510105-82 or 182		Elevator Trim
1	MC0510105-24 or 124		Elevator Upper
1	MC0510105-25 or 125		Elevator Lower
2	MC0510105-28 or 128		Stabilator Trim Forward
2	MC0510105-29 or 129		Stabilator Trim Aft
1	MC0510105-215 or 315		Aileron Yoke LH
1	MC0510105-214 or 314		Aileron Yoke RH
1	MC0760135-8 or 108		Aileron Yoke Primary
1	MC0510105-216 or 316		Aileron Yoke Transition
2	MC0510105-222 or 322		Aileron Direct
1	MC0510105-13 or 113		Aileron Carry Thru
2	MC0510105-225 or 325		Flap Direct Outboard
2	MC0510105-60 or 160		Flap Return Outboard
1	MC0510105-63 or 163		Flap Return Inboard LH
1	MC0510105-64 or 164		Flap Return Inboard RH
1	MC0510105-227 or 327		Flap Direct Inboard LH
1	MC0510105-226 or 326		Flap Direct Inboard RH
1	MC0510105-21 or 121		Flap Return Forward
1	MC0510105-22 or 122		Flap Direct Forward
1	MC0510105-278[2]		Parking Brake
1	MCS2295P25-321		Chain Stabilator Trim Fwd
1	MCS2295P25-185		Chain Stabilator Trim Aft
4	MCS2294-25		Chain Connecting Link

Kit continues in next column

Continued from previous column

Qty	P/N	Galv SS	Location
4	MC0422280		Bellcrank Aileron Bushing
Available separately for aircraft equipped with floats			
1	MC0742022-1		Rudder Return
1	MC0742022-2		Rudder Return

A185F[1] 1982[1]-1985
S/N 18504380, 18504392 thru 18504448
Complete Cable Kit P/N CCKT185-10G (Galvanized)
Complete Cable Kit P/N CCKT185-10S (Stainless Steel)
Complete Pulley Kit P/N PULL-KT-33*

Qty	P/N	Galv SS	Location
1	MC0510105-51 or 151		Rudder Forward LH
1	MC0510105-237 or 337		Rudder Forward RH
2	MC0510105-52 or 152		Rudder Aft
2	MC0760135-106[2]		Tailwheel Steering
1	MC0510105-394[2]		Tailwheel Lock
1	MC0510105-73 or 173		Rudder Trim
1	MC0510105-82 or 182		Elevator Trim
1	MC0510105-24 or 124		Elevator Upper
1	MC0510105-25 or 125		Elevator Lower
2	MC0510105-28 or 128		Stabilator Trim Forward
2	MC0510105-29 or 129		Stabilator Trim Aft
1	MC0510105-215 or 315		Aileron Yoke LH
1	MC0510105-214 or 314		Aileron Yoke RH
1	MC0760135-8 or 108		Aileron Yoke Primary
1	MC0510105-216 or 316		Aileron Yoke Transition
2	MC0510105-295 or 395		Aileron Direct to Yoke
2	MC0510105-262 or 362		Aileron Direct to Bellcrank
1	MC0510105-264 or 364		Aileron Carry Thru LH
1	MC0510105-265 or 365		Aileron Carry Thru RH
2	MC0510105-225 or 325		Flap Direct Outboard
1	MC0510105-227 or 327		Flap Direct Inboard LH
1	MC0510105-226 or 326		Flap Direct Inboard RH
1	MC0510105-21 or 121		Flap Return Forward
1	MC0510105-22 or 122		Flap Direct Forward
2	MC0510105-60 or 160		Flap Return Outboard
1	MC0510105-63 or 163		Flap Return Inboard LH
1	MC0510105-64 or 164		Flap Return Inboard RH
1	MC0510105-278[2]		Parking Brake
1	MCS2295P25-321		Stabilator Trim Forward
1	MCS2295P25-185		Stabilator Trim Aft
4	MCS2294-25		Chain Connecting Link
4	MC0422280		Bellcrank Aileron Bushing
Available separately for aircraft equipped with floats			
1	MC0742022-1		Rudder Return
1	MC0742022-2		Rudder Return

188, A188 1966[1]-1967[1]
S/N 1880001 thru 1880293
Complete Cable Kit P/N CCKT188-01
Complete Pulley Kit P/N PULL-KT-41*

Qty	P/N		Location
1	MC1660300-13		Flap Direct LH Bellcrank
1	MC1660300-12		Flap Direct RH Bellcrank
1	MC1660300-15		Flap Retract LH Bellcrank
1	MC1660300-14		Flap Retract RH Bellcrank
1	1660300-17[7]		Flap Retract to Lever
1	1660300-16[7]		Flap Direct to Lever
2	MC1660300-8		Aileron Direct to Torque Tube
2	MC1660300-9		Aileron Direct to Bellcrank
1	MC1660300-11		Aileron Carry Thru LH
1	MC1660300-10		Aileron Carry Thru RH
1	MC1660300-3		Elevator Down Forward
1	MC1660300-5		Elevator Up
1	MC1660300-4		Elevator Down Aft
1	MC1660300-6		Elevator Trim Forward Upper
1	MC1660300-7		Elevator Trim Forward Lower
1	MC0510105-187		Elevator Trim Aft Lower
1	MC0510105-198		Elevator Trim Aft Upper
1	MCS2295-25-70		Elevator Trim Chain Forward
1	MCS2295P25-71		Elevator Trim Chain Aft
4	MCS2294-25		Connecting Link
2	MC1660300-1		Rudder Forward
2	MC1660300-2		Rudder Center
2	MC0510105-152		Rudder Aft
2	MC0510105-323		Tailwheel Steering
4	MC0422280		Bellcrank Aileron Bushing

188, A188 1966[1]-1967[1]
S/N 1880294 thru 1880317
Complete Cable Kit P/N CCKT188-02
Complete Pulley Kit P/N PULL-KT-41*

Qty	P/N	Location
1	MC1660300-13	Flap Direct LH Bellcrank
1	MC1660300-12	Flap Direct RH Bellcrank
1	MC1660300-15	Flap Retract LH Bellcrank
1	MC1660300-14	Flap Retract RH Bellcrank
1	MC1660300-21	Flap Retract to Lever
1	MC1660300-20	Flap Direct to Lever
2	MC1660300-8	Aileron Direct to Torque Tube
2	MC1660300-9	Aileron Direct to Bellcrank

Kit continues on next page

*** See pages 107-108 for Pulley Kit Components**
[1] Partial model eligibility
[2] Included in both galvanized and stainless kits.
[3] For S/N 18502566 thru 18503153 only

Continued from previous page

Qty	P/N Galv SS	Location
1	MC1660300-11	Aileron Carry Thru LH
1	MC1660300-10	Aileron Carry Thru RH
1	MC1660300-3	Elevator Down Forward
1	MC1660300-5	Elevator Up
1	MC1660300-4	Elevator Down Aft
1	MC1660300-6	Elevator Trim Forward Upper
1	MC1660300-7	Elevator Trim Forward Lower
1	MC0510105-187	Elevator Trim Aft Lower
1	MC0510105-198	Elevator Trim Aft Upper
1	MCS2295-25-70	Elevator Trim Chain Forward
1	MCS2295P25-71	Elevator Trim Chain Aft
4	MCS2294-25	Connecting Link
2	MC1660300-1	Rudder Forward
2	MC1660300-2	Rudder Center
2	MC0510105-152	Rudder Aft
2	MC0510105-323	Tailwheel Steering
4	MC0422280	Bellcrank Aileron Bushing

188, A188 1968-1969
S/N 1880318 thru 1880572
Complete Cable Kit P/N CCKT188-03
Complete Pulley Kit P/N PULL-KT-42*

Qty	P/N	Location
1	MC1660300-13	Flap Direct LH Bellcrank
1	MC1660300-12	Flap Direct RH Bellcrank
1	MC1660300-15	Flap Retract LH Bellcrank
1	MC1660300-14	Flap Retract RH Bellcrank
1	MC1660300-21	Flap Retract to Lever
1	MC1660300-20	Flap Direct to Lever
2	MC1660300-8	Aileron Direct to Torque Tube
2	MC1660300-9	Aileron Direct to Bellcrank
1	MC1660300-11	Aileron Carry Thru LH
1	MC1660300-10	Aileron Carry Thru RH
1	MC1660300-3	Elevator Down Forward
1	MC1660300-5	Elevator Up
1	MC1660300-4	Elevator Down Aft
1	MC1660300-6	Elevator Trim Forward Upper
1	MC1660300-7	Elevator Trim Forward Lower
1	MC0510105-187	Elevator Trim Aft Lower
1	MC0510105-198	Elevator Trim Aft Upper
1	MCS2295-25-70	Elevator Trim Chain Forward
1	MCS2295P25-71	Elevator Trim Chain Aft
4	MCS2294-25	Connecting Link
2	MC1660300-1	Rudder Forward
2	MC1660300-2	Rudder Center
2	MC0510105-152	Rudder Aft
2	MC0510105-323	Tailwheel Steering
1	MC1613245-2	Parking Brake Cable
4	MC0422280	Bellcrank Aileron Bushing

188A, A188A 1970[1]-1971[1]
S/N 18800573 thru 18800707
Complete Cable Kit P/N CCKT188-04
Complete Pulley Kit P/N PULL-KT-43*

Qty	P/N	Location
1	MC1660300-13	Flap Direct LH Bellcrank
1	MC1660300-12	Flap Direct RH Bellcrank
1	MC1660300-15	Flap Retract LH Bellcrank
1	MC1660300-14	Flap Retract RH Bellcrank
1	MC1660300-21	Flap Retract to Lever
1	MC1660300-20	Flap Direct to Lever
2	MC1660300-30	Aileron Direct to Torque Tube
2	MC1660300-9	Aileron Direct to Bellcrank
1	MC1660300-33	Aileron Carry Thru LH
1	MC1660300-10	Aileron Carry Thru RH
1	MC1660300-3	Elevator Down Forward
1	MC1660300-5	Elevator Up
1	MC1660300-4	Elevator Down Aft
1	MC1660300-6	Elevator Trim Forward Upper
1	MC1660300-7	Elevator Trim Forward Lower
1	MC0510105-187	Elevator Trim Aft Lower
1	MC0510105-198	Elevator Trim Aft Upper
1	MCS2295-25-70	Elevator Trim Chain Forward
1	MCS2295P25-71	Elevator Trim Chain Aft
4	MCS2294-25	Connecting Link
2	MC1660300-1	Rudder Forward
2	MC1660300-2	Rudder Center
2	MC0510105-152	Rudder Aft
2	MC0510105-323	Tailwheel Steering
1	MC1613245-2	Parking Brake Cable
4	MC0422280	Bellcrank Aileron Bushing

188A, A188A 1970[1]-1971[1]
S/N 18800708 thru 18800832
Complete Cable Kit P/N CCKT188-05
Complete Pulley Kit P/N PULL-KT-44*

Qty	P/N	Location
1	MC1660300-13	Flap Direct LH Bellcrank
1	MC1660300-12	Flap Direct RH Bellcrank
1	MC1660300-15	Flap Retract LH Bellcrank
1	MC1660300-14	Flap Retract RH Bellcrank
1	MC1660300-21	Flap Retract to Lever
1	MC1660300-20	Flap Direct to Lever
2	MC1660300-35	Aileron Direct to Torque Tube
2	MC1660300-9	Aileron Direct to Bellcrank

Kit continues in next column

Continued from previous column

Qty	P/N	Location
1	MC1660300-33	Aileron Carry Thru LH
1	MC1660300-38	Aileron Carry Thru RH
1	MC1660300-3	Elevator Down Forward
1	MC1660300-5	Elevator Up
1	MC1660300-4	Elevator Down Aft
1	MC1660300-6	Elevator Trim Forward Upper
1	MC1660300-7	Elevator Trim Forward Lower
1	MC0510105-187	Elevator Trim Aft Lower
1	MC0510105-198	Elevator Trim Aft Upper
1	MCS2295-25-70	Elevator Trim Chain Forward
1	MCS2295P25-71	Elevator Trim Chain Aft
4	MCS2294-25	Connecting Link
2	MC1660300-1	Rudder Forward
2	MC1660300-2	Rudder Center
2	MC0510105-152	Rudder Aft
2	MC0510105-323	Tailwheel Steering
1	MC1613245-2	Parking Brake Cable
4	MC0422280	Bellcrank Aileron Bushing

188B[1], A188B[1] 1972[1]
S/N 18800833 thru 18800874
Complete Cable Kit P/N CCKT188-06
Complete Pulley Kit P/N PULL-KT-44*

Qty	P/N	Location
1	MC1660300-13	Flap Direct LH Bellcrank
1	MC1660300-12	Flap Direct RH Bellcrank
1	MC1660300-15	Flap Retract LH Bellcrank
1	MC1660300-14	Flap Retract RH Bellcrank
1	MC1660300-21	Flap Retract to Lever
1	MC1660300-20	Flap Direct to Lever
2	MC1660300-35	Aileron Direct to Torque Tube
2	MC1660300-9	Aileron Direct to Bellcrank
1	MC1660300-33	Aileron Carry Thru LH
1	MC1660300-38	Aileron Carry Thru RH
1	MC1660300-3	Elevator Down Forward
1	MC1660300-5	Elevator Up
1	MC1660300-4	Elevator Down Aft
1	MC1660300-6	Elevator Trim Forward Upper
1	MC1660300-7	Elevator Trim Forward Lower
1	MC0510105-187	Elevator Trim Aft Lower
1	MC0510105-198	Elevator Trim Aft Upper
1	MCS2295-25-70	Elevator Trim Chain Forward
1	MCS2295P25-71	Elevator Trim Chain Aft
4	MCS2294-25	Connecting Link
2	MC1660300-1	Rudder Forward
2	MC1660300-2	Rudder Center
2	MC0510105-152	Rudder Aft
2	MC0510105-323	Tailwheel Steering
1	MC1613245-2	Parking Brake Cable
1	MC1660300-41	Deflector
4	MC0422280	Bellcrank Aileron Bushing

188B[1], A188B[1] 1972[1]-1973
S/N 18800875 thru 18801374 & 967T thru 1374T
Complete Cable Kit P/N CCKT188-07
Complete Pulley Kit P/N PULL-KT-44* or -45* Note 1

Qty	P/N	Location
1	MC1660300-13	Flap Direct LH Bellcrank
1	MC1660300-12	Flap Direct RH Bellcrank
1	MC1660300-15	Flap Retract LH Bellcrank
1	MC1660300-14	Flap Retract RH Bellcrank
1	MC1660300-21	Flap Retract to Lever
1	MC1660300-20	Flap Direct to Lever
2	MC1660300-35	Aileron Direct to Torque Tube
2	MC1660300-9	Aileron Direct to Bellcrank
1	MC1660300-33	Aileron Carry Thru LH
1	MC1660300-38	Aileron Carry Thru RH
1	MC1660300-3	Elevator Down Forward
1	MC1660300-5	Elevator Up
1	MC1660300-4	Elevator Down Aft
1	MC1660300-6	Elevator Trim Forward Upper
1	MC1660300-7	Elevator Trim Forward Lower
1	MC0510105-187	Elevator Trim Aft Lower
1	MC0510105-198	Elevator Trim Aft Upper
1	MCS2295-25-70	Elevator Trim Chain Forward
1	MCS2295P25-71	Elevator Trim Chain Aft
4	MCS2294-25	Connecting Link
2	MC1660300-1	Rudder Forward
2	MC1660300-2	Rudder Center
2	MC0510105-152	Rudder Aft
2	MC0510105-323	Tailwheel Steering
1	MC1613245-2	Parking Brake Cable
1	MC1660300-41	Deflector
1	MC9861000-1	Tailwheel Lock Control
4	MC0422280	Bellcrank Aileron Bushing

Note 1: S/N 18800875 thru 18801348 USE PULL-KT-44
S/N 18801349T thru 18801374T USE PULL-KT-44
S/N 18801349 thru 18801374 USE PULL-KT-45

188B[1], A188B[1] 1974[1]
S/N 18801375 thru 18801402 & 1375T thru 1402T
Complete Cable Kit P/N CCKT188-08
Complete Pulley Kit P/N PULL-KT-45*

Qty	P/N	Location
1	MC1660300-13	Flap Direct LH Bellcrank
1	MC1660300-12	Flap Direct RH Bellcrank

Kit continues in next column

Continued from previous column

Qty	P/N	Location
1	MC1660300-15	Flap Retract LH Bellcrank
1	MC1660300-14	Flap Retract RH Bellcrank
1	MC1660300-21	Flap Retract to Lever
1	MC1660300-20	Flap Direct to Lever
2	MC1660300-35	Aileron Direct to Torque Tube
2	MC1660300-9	Aileron Direct to Bellcrank
1	MC1660300-33	Aileron Carry Thru LH
1	MC1660300-38	Aileron Carry Thru RH
1	MC1660300-3	Elevator Down Forward
1	MC1660300-5	Elevator Up
1	MC1660300-4	Elevator Down Aft
1	MC1660300-6	Elevator Trim Forward Upper
1	MC1660300-7	Elevator Trim Forward Lower
1	MC0510105-187	Elevator Trim Aft Lower
1	MC0510105-198	Elevator Trim Aft Upper
1	MCS2295-25-70	Elevator Trim Chain Forward
1	MCS2295P25-71	Elevator Trim Chain Aft
4	MCS2294-25	Connecting Link
2	MC1660300-1	Rudder Forward
2	MC1660300-2	Rudder Center
2	MC0510105-152	Rudder Aft
2	MC0510105-323	Tailwheel Steering
1	MC1613245-2	Parking Brake Cable
1	MC1660300-42	Deflector W/Flashing Beacon
1	MC1660300-43	Deflector
1	MC9861000-1	Tailwheel Lock Control
4	MC0422280	Bellcrank Aileron Bushing

188B[1], A188B[1] 1974[1]-1975
S/N 18801403 thru 18802348 & 1403T thru 2348T
Complete Cable Kit P/N CCKT188-09
Complete Pulley Kit P/N PULL-KT-46*

Qty	P/N	Location
1	MC1660300-13	Flap Direct LH Bellcrank
1	MC1660300-12	Flap Direct RH Bellcrank
1	MC1660300-15	Flap Retract LH Bellcrank
1	MC1660300-14	Flap Retract RH Bellcrank
1	MC1660300-21	Flap Retract to Lever
1	MC1660300-20	Flap Direct to Lever
2	MC1660300-35	Aileron Dir to Torque Tube
2	MC1660300-9	Aileron Direct to Bellcrank
1	MC1660300-33	Aileron Carry Thru LH
1	MC1660300-38	Aileron Carry Thru RH
1	MC1660300-3	Elevator Down Forward
1	MC1660300-5	Elevator Up
1	MC1660300-4	Elevator Down Aft
1	MC1660300-6	Elevator Trim Forward Upper
1	MC1660300-7	Elevator Trim Forward Lower
1	MC0510105-187	Elevator Trim Aft Lower
1	MC0510105-198	Elevator Trim Aft Upper
1	MCS2295-25-70	Elevator Trim Chain Forward
1	MCS2295P25-71	Elevator Trim Chain Aft
4	MCS2294-25	Connecting Link
2	MC1660300-1	Rudder Forward
2	MC1660300-2	Rudder Center
2	MC0510105-152	Rudder Aft
2	MC0510105-323	Tailwheel Steering
1	MC1613245-2	Parking Brake Cable
1	MC1660300-42	Deflector W/Flashing Beacon
1	MC1660300-43	Deflector
2	MC1660300-44	Parking Brake
1	MC9861000-1	Tailwheel Lock Control
4	MC0422280	Bellcrank Aileron Bushing

A188B[1] 1976
S/N 18802349 thru 18802745, 18802349T thru 18802745T
Complete Cable Kit P/N CCKT188-10
Complete Pulley Kit P/N PULL-KT-46*

Qty	P/N	Location
1	MC1660300-13	Flap Direct LH Bellcrank
1	MC1660300-12	Flap Direct RH Bellcrank
1	MC1660300-15	Flap Retract LH Bellcrank
1	MC1660300-14	Flap Retract RH Bellcrank
1	MC1660300-21	Flap Retract to Lever
1	MC1660300-20	Flap Direct to Lever
2	MC1660300-35	Aileron Direct to Torque Tube
2	MC1660300-9	Aileron Direct to Bellcrank
1	MC1660300-33	Aileron Carry Thru LH
1	MC1660300-38	Aileron Carry Thru RH
1	MC1660300-3	Elevator Down Forward
1	MC1660300-5	Elevator Up
1	MC1660300-4	Elevator Down Aft
1	MC1660300-6	Elevator Trim Forward Upper
1	MC1660300-7	Elevator Trim Forward Lower
1	MC0510105-187	Elevator Trim Aft Lower
1	MC0510105-198	Elevator Trim Aft Upper
1	MCS2295-25-70	Elevator Trim Chain Forward
1	MCS2295P25-71	Elevator Trim Chain Aft
4	MCS2294-25	Connecting Link
2	MC1660300-1	Rudder Forward
2	MC1660300-2	Rudder Center
2	MC0510105-152	Rudder Aft

Kit continues on next page

* See pages 107-108 for Pulley Kit Components
[1] Partial model eligibility [7] Listed for reference only.

Continued from previous page

Qty	P/N	Galv SS	Location
2	MC0510105-323		Tailwheel Steering
1	MC1613245-2		Parking Brake Cable
1	MC9861000-1		Tailwheel Lock Control
4	MC0422280		Bellcrank Aileron Bushing

A188B[1] 1977-1978
S/N 18802746 thru 18803296, 18802746T thru 18803296T
Complete Cable Kit P/N CCKT188-11
Complete Pulley Kit P/N PULL-KT-46*

Qty	P/N		Location
1	MC1660300-13		Flap Direct LH Bellcrank
1	MC1660300-12		Flap Direct RH Bellcrank
1	MC1660300-15		Flap Retract LH Bellcrank
1	MC1660300-14		Flap Retract RH Bellcrank
1	1660300-47[7]		Flap Retract to Lever
1	1660300-46[7]		Flap Direct to Lever
2	MC1660300-35		Aileron Direct to Torque Tube
2	MC1660300-9		Aileron Direct to Bellcrank
1	MC1660300-33		Aileron Carry Thru LH
1	MC1660300-38		Aileron Carry Thru RH
1	MC1660300-3		Elevator Down Forward
1	MC1660300-5		Elevator Up
1	MC1660300-4		Elevator Down Aft
1	MC1660300-6		Elevator Trim Forward Upper
1	MC1660300-7		Elevator Trim Forward Lower
1	MC0510105-187		Elevator Trim Aft Lower
1	MC0510105-198		Elevator Trim Aft Upper
1	MCS2295-25-70		Elevator Trim Chain Forward
1	MCS2295P25-71		Elevator Trim Chain Aft
4	MCS2294-25		Connecting Link
2	MC1660300-1		Rudder Forward
2	MC1660300-2		Rudder Center
2	MC0510105-152		Rudder Aft
2	MC0760135-106		Tailwheel Steering
1	MC1613245-2		Parking Brake Cable
1	MC9861000-1		Tailwheel Lock Control
4	MC0422280		Bellcrank Aileron Bushing

A188B[1], T188C 1979
S/N 18803297 thru 18803521, 18803297T thru 18803521T, T18803297T thru T18803521T
Complete Cable Kit P/N CCKT188-12
Complete Pulley Kit P/N PULL-KT-46*

Qty	P/N		Location
1	MC1660300-13		Flap Direct LH Bellcrank
1	MC1660300-12		Flap Direct RH Bellcrank
1	MC1660300-15		Flap Retract LH Bellcrank
1	MC1660300-14		Flap Retract RH Bellcrank
1	1660300-47[7]		Flap Retract to Lever
1	1660300-46[7]		Flap Direct to Lever
2	MC1660300-35		Aileron Direct to Torque Tube
2	MC1660300-9		Aileron Direct to Bellcrank
1	MC1660300-33		Aileron Carry Thru LH
1	MC1660300-38		Aileron Carry Thru RH
1	MC1660300-3		Elevator Down Forward
1	MC1660300-5		Elevator Up
1	MC1660300-4		Elevator Down Aft
1	MC1660300-6		Elevator Trim Forward Upper
1	MC1660300-7		Elevator Trim Forward Lower
1	MC0510105-187		Elevator Trim Aft Lower
1	MC0510105-198		Elevator Trim Aft Upper
1	MCS2295-25-70		Elevator Trim Chain Forward
1	MCS2295P25-71		Elevator Trim Chain Aft
4	MCS2294-25		Connecting Link
2	MC1660300-1		Rudder Forward
2	MC1660300-2		Rudder Center
2	MC0510105-152		Rudder Aft
2	MC0760135-106		Tailwheel Steering
1	MC1613245-2		Parking Brake Cable
1	MC9861000-1		Tailwheel Lock Control
1	MC1660300-48		Deflector
4	MC0422280		Bellcrank Aileron Bushing

A188B[1], T188C 1980-1983
S/N 18803522 thru 18803856, 18803522T thru 18803968T, T18803522T thru T18803968T
Complete Cable Kit P/N CCKT188-13
Complete Pulley Kit P/N PULL-KT-46*

Qty	P/N		Location
1	MC1660300-13		Flap Direct LH Bellcrank
1	MC1660300-12		Flap Direct RH Bellcrank
1	MC1660300-15		Flap Retract LH Bellcrank
1	MC1660300-14		Flap Retract RH Bellcrank
1	1660300-47[7]		Flap Retract to Lever
1	1660300-46[7]		Flap Direct to Lever
2	MC1660300-35		Aileron Direct to Torque Tube
2	MC1660300-9		Aileron Direct to Bellcrank
1	MC1660300-33		Aileron Carry Thru LH
1	MC1660300-38		Aileron Carry Thru RH
1	MC1660300-3		Elevator Down Forward
1	MC1660300-5		Elevator Up
1	MC1660300-4		Elevator Down Aft
1	MC1660300-6		Elevator Trim Forward Upper
1	MC1660300-7		Elevator Trim Forward Lower
1	MC0510105-187		Elevator Trim Aft Lower

Kit continues in next column

Continued from previous column

Qty	P/N	Galv SS	Location
1	MC0510105-198		Elevator Trim Aft Upper
1	MCS2295-25-70		Elevator Trim Chain Forward
1	MCS2295P25-71		Elevator Trim Chain Aft
4	MCS2294-25		Connecting Link
2	MC1660300-1		Rudder Forward
2	MC1660300-2		Rudder Center
2	MC0510105-152		Rudder Aft
2	MC0760135-106		Tailwheel Steering
1	MC1613245-2		Parking Brake Cable
1	MC9861000-1		Tailwheel Lock Control
4	MC0422280		Bellcrank Aileron Bushing

210-5 (205)[1] 1963[1]
S/N 205-0001 thru 205-0050
Complete Cable Kit P/N CCKT205-01G (Galvanized)
Complete Cable Kit P/N CCKT205-01S (Stainless Steel)
Complete Pulley Kit P/N PULL-KT-47*

Qty	P/N	Galv SS	Location
1	MC1260505-1 or 101		Park Brake
1	MC1260417-1 or 2		Park Brake Cable & Tube
2	MC1260505-3 or 103		Aileron Direct
1	MC0510105-13 or 113		Aileron Carry Thru
1	MC1260505-18 or 118		Elevator Down
1	MC1260505-19 or 119		Elevator Up
1	MC1260505-2 or 102		Elevator Down Spring
1	MCS2295-25-185		Chain Elevator Trim Fwd Low
1	MCS2295A25-111		Chain Elevator Trim Fwd Up
1	MC1260505-16 or 116		Elevator Trim Forward LH
1	MC1260505-17 or 117		Elevator Trim Forward RH
1	MC1260505-8 or 108		Elevator Trim Aft LH
1	MC1260505-7 or 107		Elevator Trim Aft RH
1	MC0510105-93 or 193[6]		Flap Retract
1	MC0510105-91 or 191		Flap Direct RH
1	MC0510105-94 or 194[6]		Flap Retract
1	MC0510105-92 or 192		Flap Direct RH
1	MC0510105-203 0r 303		Rudder Forward LH
1	MC0510105-204 or 304		Rudder Forward RH
1	MC1260505-13 or 113		Rudder Aft LH
1	MC1260505-12 or 112		Rudder Aft RH
1	MCS2295P25-113		Chain Elevator Trim Actuator
6	MCS2294-25		Chain Connecting Link
4	MC0422280		Bellcrank Aileron Bushing

210-5 (205)[1],210-5A (205A) 1963[1]-1964
S/N 205-0051 thru 205-0577
Complete Cable Kit P/N CCKT205-02G (Galvanized)
Complete Cable Kit P/N CCKT205-02S (Stainless Steel)
Complete Pulley Kit P/N PULL-KT-47*

Qty	P/N	Galv SS	Location
1	MC1260505-1 or 101		Park Brake
1	MC1260417-1 or 2		Park Brake Cable & Tube
2	MC1260505-3 or 103		Aileron Direct
1	MC0510105-13 or 113		Aileron Carry Thru
1	MC1260505-18 or 118		Elevator Down
1	MC1260505-19 or 119		Elevator Up
1	MC1260505-2 or 102		Elevator Down Spring
1	MCS2295-25-185		Chain Elevator Trim Fwd Low
1	MCS2295A25-111		Chain Elevator Trim Fwd Up
1	MC1260505-16 or 116		Elevator Trim Forward LH
1	MC1260505-21 or 121		Elevator Trim Forward RH
1	MC1260505-8 or 108		Elevator Trim Aft LH
1	MC1260505-20 or 120		Elevator Trim Aft RH
1	MC0510105-93 or 193[6]		Flap Retract
1	MC0510105-91 or 191		Flap Direct RH
1	MC0510105-94 or 194[6]		Flap Retract
1	MC0510105-92 or 192		Flap Direct RH
1	MC0510105-203 or 303		Rudder Forward LH
1	MC0510105-204 or 304		Rudder Forward RH
1	MC1260505-13 or 113		Rudder Aft LH
1	MC1260505-12 or 112		Rudder Aft RH
1	MCS2295P25-113		Chain Elevator Trim Actuator
6	MCS2294-25		Chain Connecting Link
4	MC0422280		Bellcrank Aileron Bushing

206,U206,A,B,TU206A,B 1964-1967
P206,P206A,B,TP206A,B 1964-1967
S/N 206-0001 thru U206-0914, P206-0001 thru P206-0419
Complete Cable Kit P/N CCKT206-01G (Galvanized)
Complete Cable Kit P/N CCKT206-01S (Stainless Steel)
Complete Pulley Kit P/N PULL-KT-48*

Qty	P/N	Galv SS	Location
1	MC1260417-1 or 2		Park Cable and Tube
1	MC1260505-1 or 101		Park Brake
1	MC1260505-29 or 129		Elevator Down Forward
1	MC1260505-30 or 130		Elevator Up Forward
1	MC1260505-28 or 128		Elevator Down Spring
1	MCS2295A25-111		Chain Elevator Trim Fwd Up
1	MCS2295-25-185		Chain Elevator Trim Fwd Low
1	MC1260505-16 or 116		Elevator Trim Forward LH
1	MC1260505-21 or 121		Elevator Trim Forward RH
1	MC1260505-8 or 108		Elevator Trim Aft LH
1	MC1260505-20 or 120		Elevator Trim Aft RH
2	MC1260505-25 or 125		Aileron Direct
2	MC1260505-26 or 126		Aileron Direct Outboard
1	MC1260505-23 or 123		Aileron Carry Thru LH

Kit continues in next column

Continued from previous column

Qty	P/N	Galv SS	Location
1	MC1260505-27 or 127		Aileron Carry Thru RH
1	MC0510105-93 or 193[6]		Flap Retract
1	MC0510105-94 or 194[6]		Flap Retract
1	MC0510105-91 or 191		Flap Direct LH
1	MC0510105-92 or 192		Flap Direct RH
1	MC0510105-203 or 303		Rudder Forward LH
1	MC0510105-204 or 304		Rudder Forward RH
1	MC1260505-12 or 112		Rudder Aft RH
1	MC1260505-13 or 113		Rudder Aft LH
1	MCS2295P25-113[10]		Chain Elevator Trim Actuator
6	MCS2294-25		Chain Connecting Link
Available separately for aircraft with camera option			
1	MC1260105-9 or 109		Rudder Aft LH with Camera

U206C,D[1],TU206C,D[1] 1968-1969[1]
P206C,D[1],TP206C,D[1] 1968-1969[1]
S/N U206-0915 thru U206-1345, P206-0420 thru P206-0583
Complete Cable Kit P/N CCKT206-02G (Galvanized)
Complete Cable Kit P/N CCKT206-02S (Stainless Steel)
Complete Cable Kit P/N CCKT206-02GE (Galv. Elec. Trim)
Complete Cable Kit P/N CCKT206-02SE (SS Electric Trim)
Complete Pulley Kit P/N PULL-KT-49*

Qty	P/N	Galv SS	Location
1	MC1260505-1 or 101		Park Brake
1	MC1260417-1 or 2		Park Cable and Tube
1	MC1260505-29 or 129		Elevator Down Forward
1	MC1260505-30 or 130		Elevator Up Forward
1	MC1260505-53 or 153		Elevator Down Spring
1	MCS2295A25-111		Chain Elevator Trim Fwd Up
1	MCS2295-25-185		Chain Elevator Trim Fwd Low
1	MC1260505-16 or 116		Elevator Trim Forward LH[8]
1	MC1260505-21 or 121		Elevator Trim Forward RH[8]
1	MC1260505-46 or 146		Elevator Trim Aft LH[8]
1	MC1260505-45 or 145		Elevator Trim Aft RH[8]
1	MC1260078-8 or 108		Aileron Yoke RH
1	MC1260078-7 or 107		Aileron Yoke LH
1	MC1260078-5 or 105		Aileron Yoke Primary
2	MC1260505-55 or 155		Aileron Direct Inboard
2	MC1260505-58 or 158		Aileron Direct Outboard
2	MC1260505-60 or 160		Aileron Carry Thru LH
1	MC1260505-54 or 154		Aileron Carry Thru RH
1	MC1260505-168 or 168		Elevator Trim Center LH[9]
1	MC1260505-64 or 164		Elevator Trim Center RH[9]
1	MC1260505-63 or 163		Elevator Trim Forward LH[9]
1	MC1260505-69 or 169		Elevator Trim Aft RH[9]
1	MC1260505-57 or 157		Elevator Trim Aft LH[9]
1	MC0510105-93 or 193[6]		Flap Retract
1	MC0510105-94 or 194[6]		Flap Retract
1	MC0510105-91 or 191		Flap Direct LH
1	MC0510105-92 or 192		Flap Direct RH
1	MC0510105-203 or 303		Rudder Forward LH
1	MC0510105-204 or 304		Rudder Forward RH
1	MC1260505-12 or 112		Rudder Aft RH
1	MC1260505-13 or 113		Rudder Aft LH
1	MCS2295P25-113[10]		Chain Elevator Trim Actuator
6	MCS2294-25		Chain Connecting Link
Available separately for aircraft with camera option			
1	MC1260105-9 or 109		Rudder Aft LH with Camera

U206D[1],E[1], TU206D[1],E[1] 1965-1971[1]
P206D[1],E, TP206D[1],E 1965-1971[1]
S/N U206-1346 thru U20601667, P206-0584 thru P20600647
Complete Cable Kit P/N CCKT206-03G (Galvanized)
Complete Cable Kit P/N CCKT206-03S (Stainless Steel)
Complete Cable Kit P/N CCKT206-03GE (Galv. Elec. Trim)
Complete Cable Kit P/N CCKT206-03SE (SS Electric Trim)
Complete Pulley Kit P/N PULL-KT-49*

Qty	P/N	Galv SS	Location
1	MC1260505-1 or 101		Park Brake
1	MC1260417-1 or 2		Park Brake Cable & Tube
1	MC1260505-29 or 129		Elevator Down Forward
1	MC1260505-30 or 130		Elevator Up Forward
1	MC1260505-303 or 403		Elevator Down Spring
1	MCS2295A25-111		Chain Elevator Trim Fwd Up
1	MCS2295-25-185		Chain Elevator Trim Fwd Low
1	MC1260505-95 or 195		Elevator Trim Forward LH[8]
1	MC1260505-92 or 192		Elevator Trim Forward RH[8]
1	MC1260505-46 or 146		Elevator Trim Aft LH[8]
1	MC1260505-91 or 191		Elevator Trim Aft RH[8]
1	MC1260078-8 or 108		Aileron Yoke RH
1	MC1260078-7 or 107		Aileron Yoke LH
1	MC1260078-5 or 105		Aileron Yoke Primary
2	MC1260505-55 or 155		Aileron Direct Inboard
2	MC1260505-58 or 158		Aileron Direct Outboard
2	MC1260505-60 or 160		Aileron Carry Thru LH
1	MC1260505-54 or 154		Aileron Carry Thru RH

Kit continues on next page

*** See pages 107-108 for Pulley Kit Components**
[1] Partial model eligibility
[2] Included in both galvanized and stainless kits.
[6] Due to inconsistency in OEM parts these flap cables should be replaced at the same time.
[8] Included in kits for manual trim aircraft only.
[9] Included in kits for electric trim aircraft only.
[10] Pending FAA-PMA approval of eligibility for these aircraft. Not included in kit until approval received.

Continued from previous page

Qty	P/N	Galv	SS	Location
1	MC1260505-168 or 168			Elevator Trim Center LH[9]
1	MC1260505-64 or 164			Elevator Trim Center RH[9]
1	MC1260505-63 or 163			Elevator Trim Forward LH[9]
1	MC1260505-69 or 169			Elevator Trim Aft RH[9]
1	MC1260505-57 or 157			Elevator Trim Aft LH[9]
1	MC0510105-93 or 193[6]			Flap Retract
1	MC0510105-94 or 194[6]			Flap Retract
1	MC0510105-91 or 191			Flap Direct LH
1	MC0510105-92 or 192			Flap Direct RH
1	MC0510105-203 or 303			Rudder Forward LH
1	MC0510105-204 or 304			Rudder Forward RH
1	MC1260505-12 or 112			Rudder Aft RH
1	MC1260505-13 or 113			Rudder Aft LH
1	MCS2295-25-47			Chain Elevator Trim Actuator
6	MCS2294-25			Chain Connecting Link
Available separately for aircraft with camera option				
1	MC1260105-9 or 109			Rudder Aft LH with Camera

U206E[1], TU206E[1] 1971[1]
S/N U20601668 thru U20601700
Complete Cable Kit P/N CCKT206-04G (Galvanized)
Complete Cable Kit P/N CCKT206-04S (Stainless Steel)
Complete Cable Kit P/N CCKT206-04GE (Galv. Elec. Trim)
Complete Cable Kit P/N CCKT206-04SE (SS Electric Trim)
Complete Pulley Kit P/N PULL-KT-50*

Qty	P/N	Galv	SS	Location
1	MC1260505-97 or 197			Park Brake
1	MC1260417-1 or 2			Park Brake Cable & Tube
1	MC1260505-29 or 129			Elevator Down Forward
1	MC1260505-30 or 130			Elevator Up Forward
1	MC1260505-303 or 403			Elevator Down Spring
1	MCS2295A25-111			Chain Elevator Trim Fwd Up
1	MCS2295-25-185			Chain Elevator Trim Fwd Low
1	MC1260505-95 or 195			Elevator Trim Forward LH[8]
1	MC1260505-92 or 192			Elevator Trim Forward RH[8]
1	MC1260505-46 or 146			Elevator Trim Aft LH[8]
1	MC1260505-91 or 191			Elevator Trim Aft RH[8]
1	MC1260078-8 or 108			Aileron Yoke RH
1	MC1260078-7 or 107			Aileron Yoke LH
1	MC1260078-5 or 105			Aileron Yoke Primary
2	MC1260505-55 or 155			Aileron Direct Inboard
2	MC1260505-58 or 158			Aileron Direct Outboard
2	MC1260505-60 or 160			Aileron Carry Thru LH
1	MC1260505-54 or 154			Aileron Carry Thru RH
1	MC1260505-168 or 168			Elevator Trim Center LH[9]
1	MC1260505-64 or 164			Elevator Trim Center RH[9]
1	MC1260505-63 or 163			Elevator Trim Forward LH[9]
1	MC1260505-69 or 169			Elevator Trim Aft RH[9]
1	MC1260505-57 or 157			Elevator Trim Aft LH[9]
1	MC0510105-93 or 193[6]			Flap Retract
1	MC0510105-94 or 194[6]			Flap Retract
1	MC0510105-91 or 191			Flap Direct LH
1	MC0510105-92 or 192			Flap Direct RH
1	MC0510105-203 or 303			Rudder Forward LH
1	MC0510105-204 or 304			Rudder Forward RH
1	MC1260505-12 or 112			Rudder Aft RH
1	MC1260505-13 or 113			Rudder Aft LH
1	MCS2295-25-47			Chain Elevator Trim Actuator
6	MCS2294-25			Chain Connecting Link
Available separately for aircraft with camera option				
1	MC1260105-9 or 109			Rudder Aft LH with Camera

U206F[1], TU206F[1] 1972[1]
S/N U20601701 thru U20601748
Complete Cable Kit P/N CCKT206-05G (Galvanized)
Complete Cable Kit P/N CCKT206-05S (Stainless Steel)
Complete Cable Kit P/N CCKT206-05GE (Galv. Elec. Trim)
Complete Cable Kit P/N CCKT206-05SE (SS Electric Trim)
Complete Pulley Kit P/N PULL-KT-51*

Qty	P/N	Galv	SS	Location
1	MC1260505-97 or 197			Park Brake
1	MC1260417-1 or 2			Park Brake Cable & Tube
1	MC1260505-29 or 129			Elevator Down Forward
1	MC1260505-30 or 130			Elevator Up Forward
1	MC1260505-303 or 403			Elevator Down Spring
1	MCS2295A25-111			Chain Elevator Trim Fwd Up
1	MC1260505-95 or 195			Elevator Trim Forward LH[8]
1	MCS2295-25-185			Chain Elevator Trim Fwd Low
1	MC1260505-98 or 198			Elevator Trim Forward RH[8]
1	MC1260505-46 or 146			Elevator Trim Aft LH[8]
1	MC1260505-99 or 199			Elevator Trim Aft RH[8]
1	MC1260078-8 or 108			Aileron Yoke RH
1	MC1260078-7 or 107			Aileron Yoke LH
1	MC1260078-5 or 105			Aileron Yoke Primary
2	MC1260505-55 or 155			Aileron Direct Inboard
2	MC1260505-58 or 158			Aileron Direct Outboard
2	MC1260505-60 or 160			Aileron Carry Thru LH
1	MC1260505-54 or 154			Aileron Carry Thru RH
1	MC1260505-168 or 168			Elevator Trim Center LH[9]
1	MC1260505-64 or 164			Elevator Trim Center RH[9]
1	MC1260505-63 or 163			Elevator Trim Forward LH[9]
1	MC1260505-69 or 169			Elevator Trim Aft RH[9]
1	MC1260505-57 or 157			Elevator Trim Aft LH[9]
1	MC0510105-93 or 193[6]			Flap Retract

Kit continues in next column

Continued from previous column

Qty	P/N	Galv	SS	Location
1	MC0510105-94 or 194[6]			Flap Retract
1	MC0510105-91 or 191			Flap Direct LH
1	MC0510105-92 or 192			Flap Direct RH
1	MC0510105-203 or 303			Rudder Forward LH
1	MC0510105-204 or 304			Rudder Forward RH
1	MC1260505-12 or 112			Rudder Aft RH
1	MC1260505-13 or 113			Rudder Aft LH
1	MCS2295-25-47			Chain Elevator Trim Actuator
6	MCS2294-25			Chain Connecting Link
Available separately for aircraft with camera option				
1	MC1260105-118[2]			Rudder Aft LH with Camera

U206F[1], TU206F[1] 1972[1]-1973[1]
S/N U20601749 thru U20601874
Complete Cable Kit P/N CCKT206-06G (Galvanized)
Complete Cable Kit P/N CCKT206-06S (Stainless Steel)
Complete Cable Kit P/N CCKT206-06GE (Galv. Elec. Trim)
Complete Cable Kit P/N CCKT206-06SE (SS Electric Trim)
Complete Pulley Kit P/N PULL-KT-51*

Qty	P/N	Galv	SS	Location
1	MC1260505-97 or 197			Park Brake
1	MC1260417-6 or 7			Park Brake Cable & Tube
1	MC1260505-29 or 129			Elevator Down Forward
1	MC1260505-30 or 130			Elevator Up Forward
1	MC1260505-303 or 403			Elevator Down Spring
1	MCS2295A25-111			Chain Elevator Trim Fwd Up
1	MCS2295-25-185			Chain Elevator Trim Fwd Low
1	MC1260505-95 or 195			Elevator Trim Forward LH[8]
1	MC1260505-98 or 198			Elevator Trim Forward RH[8]
1	MC1260505-46 or 146			Elevator Trim Aft LH[8]
1	MC1260505-99 or 199			Elevator Trim Aft RH[8]
1	MC1260078-8 or 108			Aileron Yoke RH
1	MC1260078-7 or 107			Aileron Yoke LH
1	MC1260078-5 or 105			Aileron Yoke Primary
2	MC1260505-55 or 155			Aileron Direct Inboard
2	MC1260505-58 or 158			Aileron Direct Outboard
2	MC1260505-60 or 160			Aileron Carry Thru LH
1	MC1260505-54 or 154			Aileron Carry Thru RH
1	MC1260505-168 or 168			Elevator Trim Center LH[9]
1	MC1260505-64 or 164			Elevator Trim Center RH[9]
1	MC1260505-63 or 163			Elevator Trim Forward LH[9]
1	MC1260505-69 or 169			Elevator Trim Aft RH[9]
1	MC1260505-57 or 157			Elevator Trim Aft LH[9]
1	MC0510105-93 or 193[6]			Flap Retract
1	MC0510105-94 or 194[6]			Flap Retract
1	MC0510105-91 or 191			Flap Direct LH
1	MC0510105-92 or 192			Flap Direct RH
1	MC0510105-203 or 303			Rudder Forward LH
1	MC0510105-204 or 304			Rudder Forward RH
1	MC1260505-12 or 112			Rudder Aft RH
1	MC1260505-13 or 113			Rudder Aft LH
1	MCS2295-25-47			Chain Elevator Trim Actuator
6	MCS2294-25			Chain Connecting Link
Available separately for aircraft with camera option				
1	MC1260105-118[2]			Rudder Aft LH with Camera

U206F[1], TU206F[1] 1973[1]
S/N U20601875 thru U20601957
Complete Cable Kit P/N CCKT206-07G (Galvanized)
Complete Cable Kit P/N CCKT206-07S (Stainless Steel)
Complete Pulley Kit P/N PULL-KT-52*

Qty	P/N	Galv	SS	Location
1	MC1260505-97 or 197			Park Brake
1	MC1260417-6 or 7			Park Brake Cable & Tube
1	MC1260505-29 or 129			Elevator Down Forward
1	MC1260505-30 or 130			Elevator Up Forward
1	MC1260505-303 or 403			Elevator Down Spring
1	MCS2295A25-111			Chain Elevator Trim Fwd Up
1	MCS2295-25-185			Chain Elevator Trim Fwd Low
1	MC1260505-95 or 195			Elevator Trim Forward LH
1	MC1260505-98 or 198			Elevator Trim Forward RH
1	MC1260505-46 or 146			Elevator Trim Aft LH
1	MC1260505-99 or 199			Elevator Trim Aft RH
1	MC1260078-8 or 108			Aileron Yoke RH
1	MC1260078-7 or 107			Aileron Yoke LH
1	MC1260078-5 or 105			Aileron Yoke Primary
2	MC1260505-55 or 155			Aileron Direct Inboard
2	MC1260505-58 or 158			Aileron Direct Outboard
2	MC1260505-60 or 160			Aileron Carry Thru LH
1	MC1260505-54 or 154			Aileron Carry Thru RH
1	MC0510105-93 or 193[6]			Flap Retract
1	MC0510105-94 or 194[6]			Flap Retract
1	MC0510105-91 or 191			Flap Direct LH
1	MC0510105-92 or 192			Flap Direct RH
1	MC0510105-203 or 303			Rudder Forward LH
1	MC0510105-204 or 304			Rudder Forward RH
1	MC1260505-12 or 112			Rudder Aft RH
1	MC1260505-13 or 113			Rudder Aft LH
1	MCS2295-25-47			Chain Elevator Trim Actuator
6	MCS2294-25			Chain Connecting Link
Available separately for aircraft with camera option				
1	MC1260105-118[2]			Rudder Aft LH with Camera

U206F[1], TU206F[1] 1973[1]
S/N U20601958 thru U20602199
Complete Cable Kit P/N CCKT206-08G (Galvanized)
Complete Cable Kit P/N CCKT206-08S (Stainless Steel)
Complete Pulley Kit P/N PULL-KT-52*

Qty	P/N	Galv	SS	Location
1	MC1260505-97 or 197			Park Brake
1	MC1260417-6 or 7			Park Brake Cable & Tube
1	MC1260505-29 or 129			Elevator Down Forward
1	MC1260505-30 or 130			Elevator Up Forward
1	MC1260505-303 or 403			Elevator Down Spring
1	MCS2295A25-111			Chain Elevator Trim Fwd Up
1	MCS2295-25-185			Chain Elevator Trim Fwd Low
1	MC1260505-95 or 195			Elevator Trim Forward LH
1	MC1260505-98 or 198			Elevator Trim Forward RH
1	MC1260505-46 or 146			Elevator Trim Aft LH
1	MC1260505-304 or 304			Elevator Trim Aft RH
1	MC1260078-8 or 108			Aileron Yoke RH
1	MC1260078-7 or 107			Aileron Yoke LH
1	MC1260078-5 or 105			Aileron Yoke Primary
2	MC1260505-55 or 155			Aileron Direct Inboard
2	MC1260505-58 or 158			Aileron Direct Outboard
2	MC1260505-60 or 160			Aileron Carry Thru LH
1	MC1260505-54 or 154			Aileron Carry Thru RH
1	MC0510105-93 or 193[6]			Flap Retract
1	MC0510105-94 or 194[6]			Flap Retract
1	MC0510105-91 or 191			Flap Direct LH
1	MC0510105-92 or 192			Flap Direct RH
1	MC0510105-203 or 303			Rudder Forward LH
1	MC0510105-204 or 304			Rudder Forward RH
1	MC1260505-12 or 112			Rudder Aft RH
1	MC1260505-13 or 113			Rudder Aft LH
1	MCS2295-25-47			Chain Elev Trim Actuator
6	MCS2294-25			Chain Connecting Link
Available separately for aircraft with camera option				
1	MC1260105-118[2]			Rudder Aft LH with Camera

U206F[1] 1974
S/N U20602200 thru U20602579
Complete Cable Kit P/N CCKT206-09G (Galvanized)
Complete Cable Kit P/N CCKT206-09S (Stainless Steel)
Complete Pulley Kit P/N PULL-KT-53*

Qty	P/N	Galv	SS	Location
1	MC1260505-97 or 197			Park Brake
1	MC1260417-6 or 7			Park Brake Cable & Tube
1	MC1260505-29 or 129			Elevator Down Forward
1	MC1260505-30 or 130			Elevator Up Forward
1	MC1260505-303 or 403			Elevator Down Spring
1	MCS2295A25-111			Chain Elevator Trim Fwd Up
1	MCS2295-25-185			Chain Elevator Trim Fwd Low
1	MCS2295-25-47			Chain Elevator Trim Actuator
1	MC1260505-95 or 195			Elevator Trim Forward LH
1	MC1260505-98 or 198			Elevator Trim Forward RH
1	MC1260505-46 or 146			Elevator Trim Aft LH
1	MC1260505-99 or 199			Elevator Trim Aft RH
1	MC1260078-5 or 105			Aileron Yoke Primary
1	MC1260078-7 or 107			Aileron Yoke LH
1	MC1260078-8 or 108			Aileron Yoke RH
2	MC1260505-55 or 155			Aileron Direct Inboard
2	MC1260505-58 or 158			Aileron Direct Outboard
1	MC1260505-60 or 160			Aileron Carry Thru LH
1	MC1260505-54 or 154			Aileron Carry Thru RH
1	MC0510105-93 or 193[6]			Flap Retract
1	MC0510105-94 or 194[6]			Flap Retract
1	MC0510105-259 or 359			Flap Direct LH
1	MC0510105-92 or 192			Flap Direct RH
1	MC0510105-203 or 303			Rudder Forward LH
1	MC0510105-204 or 304			Rudder Forward RH
1	MC1260505-12 or 112			Rudder Aft RH
1	MC1260505-13 or 113			Rudder Aft LH
6	MCS2294-25			Chain Connecting Link
Available separately for aircraft with camera option				
1	MC1260105-118[2]			Rudder Aft LH with Camera

U206F[1],G[1], TU206F[1],G[1] 1975-1980
S/N U20602580 thru U20605919
Complete Cable Kit P/N CCKT206-10G (Galvanized)
Complete Cable Kit P/N CCKT206-10S (Stainless Steel)
Complete Pulley Kit P/N PULL-KT-54* or -55* Note 1

Qty	P/N	Galv	SS	Location
1	MC1260505-97 or 197			Park Brake
1	MC1260417-6 or 7			Park Brake Cable & Tube
2	MC1260505-306 or 406			Elevator Control
1	MCS2295A25-111			Chain Elevator Trim Fwd Up
1	MCS2295-25-185			Chain Elevator Trim Fwd Low
1	MCS2295-25-47			Chain Elevator Trim Actuator
1	MC1260505-95 or 195			Elevator Trim Forward LH
1	MC1260505-98 or 198			Elevator Trim Forward RH
1	MC1260505-46 or 146			Elevator Trim Aft LH
1	MC1260505-99 or 199			Elevator Trim Aft RH

Kit continues on next page

*** See pages 107-108 for Pulley Kit Components**
[1] Partial model eligibility
[2] Included in both galvanized and stainless kits.
[6] Due to inconsistency in OEM parts these flap cables should be replaced at the same time.
[8] Included in kits for manual trim aircraft only.
[9] Included in kits for electric trim aircraft only.

Continued from previous page

Qty	P/N	Galv	SS	Location
1	MC1260078-5 or 105			Aileron Yoke Primary
1	MC1260078-7 or 107			Aileron Yoke LH
1	MC1260078-8 or 108			Aileron Yoke RH
2	MC1260505-55 or 155			Aileron Direct Inboard
2	MC1260505-58 or 158			Aileron Direct Outboard
1	MC1260505-60 or 160			Aileron Carry Thru LH
1	MC1260505-54 or 154			Aileron Carry Thru RH
1	MC0510105-93 or 193[6]			Flap Retract
1	MC0510105-94 or 194[6]			Flap Retract
1	MC0510105-259 or 359			Flap Direct LH
1	MC0510105-92 or 192			Flap Direct RH
1	MC0510105-203 or 303			Rudder Forward LH
1	MC0510105-204 or 304			Rudder Forward RH
1	MC1260505-12 or 112			Rudder Aft RH
1	MC1260505-13 or 113			Rudder Aft LH
6	MCS2294-25			Chain Connecting Link
Available separately for aircraft with camera option				
1	MC1260105-118[2]			Rudder Aft LH with Camera

Note 1:
S/N U20602580 thru U20603798 USE PULL-KT-54
S/N U20603799 thru U20605919 USE PULL-KT-55

U206G[1], TU206G[1] 1981[1]
S/N U20605920 thru U20606003
Complete Cable Kit P/N CCKT206-11G (Galvanized)
Complete Cable Kit P/N CCKT206-11S (Stainless Steel)
Complete Pulley Kit P/N PULL-KT-55*

Qty	P/N	Galv	SS	Location
1	MC1260505-317 or 417			Park Brake
1	MC1260417-6 or 7			Park Brake Cable & Tube
2	MC1260505-306 or 406			Elevator Control
1	MCS2295A25-111			Chain Elevator Trim Fwd Up
1	MCS2295-25-185			Chain Elevator Trim Fwd Low
1	MCS2295-25-47			Chain Elevator Trim Actuator
1	MC1260505-95 or 195			Elevator Trim Forward LH
1	MC1260505-98 or 198			Elevator Trim Forward RH
1	MC1260505-46 or 146			Elevator Trim Aft LH
1	MC1260505-99 or 199			Elevator Trim Aft RH
1	MC1260078-5 or 105			Aileron Yoke Primary
1	MC1260078-7 or 107			Aileron Yoke LH
1	MC1260078-8 or 108			Aileron Yoke RH
2	MC1260505-55 or 155			Aileron Direct Inboard
2	MC1260505-58 or 158			Aileron Direct Outboard
1	MC1260505-60 or 160			Aileron Carry Thru LH
1	MC1260505-54 or 154			Aileron Carry Thru RH
1	MC0510105-93 or 193[6]			Flap Retract
1	MC0510105-94 or 194[6]			Flap Retract
1	MC0510105-259 or 359			Flap Direct LH
1	MC0510105-92 or 192			Flap Direct RH
1	MC0510105-203 or 303			Rudder Forward LH
1	MC0510105-204 or 304			Rudder Forward RH
1	MC1260505-12 or 112			Rudder Aft RH
1	MC1260505-13 or 113			Rudder Aft LH
6	MCS2294-25			Chain Connecting Link
Available separately for aircraft with camera option				
1	MC1260105-118[2]			Rudder Aft LH with Camera

U206G[1], TU206G[1] 1981[1]
S/N U20606004 thru U20606439
Complete Cable Kit P/N CCKT206-12G (Galvanized)
Complete Cable Kit P/N CCKT206-12S (Stainless Steel)
Complete Pulley Kit P/N PULL-KT-55*

Qty	P/N	Galv	SS	Location
1	MC1260505-317 or 417			Park Brake
1	MC1260417-6 or 7			Park Brake Cable & Tube
2	MC1260505-306 or 406			Elevator Control
1	MCS2295A25-111			Chain Elevator Trim Fwd Up
1	MCS2295-25-185			Chain Elevator Trim Fwd Low
1	MCS2295-25-47			Chain Elevator Trim Actuator
1	MC1260505-95 or 195			Elevator Trim Forward LH
1	MC1260505-98 or 198			Elevator Trim Forward RH
1	MC1260505-46 or 146			Elevator Trim Aft LH
1	MC1260505-99 or 199			Elevator Trim Aft RH
1	MC1260078-5 or 105			Aileron Yoke Primary
1	MC1260078-7 or 107			Aileron Yoke LH
1	MC1260078-8 or 108			Aileron Yoke RH
2	MC1260505-55 or 155			Aileron Direct Inboard
2	MC1260505-58 or 158			Aileron Direct Outboard
1	MC1260505-60 or 160			Aileron Carry Thru LH
1	MC1260505-54 or 154			Aileron Carry Thru RH
1	MC0510105-93 or 193[6]			Flap Retract
1	MC0510105-94 or 194[6]			Flap Retract
1	MC0510105-259 or 359			Flap Direct LH
1	MC0510105-92 or 192			Flap Direct RH
1	MC0510105-203 or 303			Rudder Forward LH
1	MC0510105-204 or 304			Rudder Forward RH
1	MC1260505-12 or 112			Rudder Aft RH
1	MC1260505-13 or 113			Rudder Aft LH
6	MCS2294-25			Chain Connecting Link
Available separately for aircraft with camera option				
1	MC1260105-118[2]			Rudder Aft LH with Camera

U206G, TU206G[1] 1982-1986
S/N U20606440 thru U20607020
Complete Cable Kit P/N CCKT206-13G (Galvanized)
Complete Cable Kit P/N CCKT206-13S (Stainless Steel)
Complete Pulley Kit P/N PULL-KT-55*

Qty	P/N	Galv	SS	Location
1	MC1260505-317 or 417			Park Brake
1	MC1260417-6 or 7			Park Brake Cable & Tube
2	MC1260505-306 or 406			Elevator Control
1	MCS2295A25-111			Chain Elevator Trim Fwd Up
1	MCS2295-25-185			Chain Elevator Trim Fwd Low
1	MCS2295-25-47			Chain Elevator Trim Actuator
1	MC1260505-95 or 195			Elevator Trim Forward LH
1	MC1260505-98 or 198			Elevator Trim Forward RH
1	MC1260505-46 or 146			Elevator Trim Aft LH
1	MC1260505-99 or 199			Elevator Trim Aft RH
1	MC1260078-12 or 112			Aileron Yoke RH
1	MC1260078-11 or 111			Aileron Yoke LH
1	MC1260078-10 or 110			Aileron Yoke Primary
2	MC1260505-320 or 420			Aileron Direct
2	MC1260505-58 or 158			Aileron Direct Outboard
1	MC1260505-60 or 160			Aileron Carry Thru LH
1	MC1260505-54 or 154			Aileron Carry Thru RH
1	MC0510105-93 or 193[6]			Flap Retract
1	MC0510105-94 or 194[6]			Flap Retract
1	MC0510105-259 or 359			Flap Direct LH
1	MC0510105-92 or 192			Flap Direct RH
1	MC0510105-203 or 303			Rudder Forward LH
1	MC0510105-204 or 304			Rudder Forward RH
1	MC1260505-12 or 112			Rudder Aft RH
1	MC1260505-319 or 419			Rudder Aft LH
6	MCS2294-25			Chain Connecting Link
Available separately for aircraft with camera option				
1	MC1260105-118[2]			Rudder Aft LH with Camera

206H, T206H 1998 & On
S/N 20608001 and T20608001 & On
Complete Cable Kit P/N CCKT206H-01G (Galvanized)
Complete Cable Kit P/N CCKT206H-01S (Stainless Steel)
Complete Pulley Kit P/N PULL-KT-56*

Qty	P/N	Galv	SS	Location
1	MC1260505-97[2]			Park Brake
1	MC1260417-6 or 7			Park Brake Cable & Tube
2	MC1260505-306 or 406			Elevator Control
1	MC1260505-46 or 146			Elevator Trim Aft LH
1	MC1260505-95 or 195			Elevator Trim Forward LH
1	MC1260505-98 or 198			Elevator Trim Forward RH
1	MC1260505-99 or 199			Elevator Trim Aft RH
1	MC1260078-10 or 110			Aileron Yoke Primary
1	MC1260078-11 or 111			Aileron Yoke LH
1	MC1260078-12 or 112			Aileron Yoke RH
1	MC1260505-54 or 154			Aileron Carry Thru RH
2	MC1260505-58 or 158			Aileron Direct Outboard
1	MC1260505-60 or 160			Aileron Carry Thru LH
2	MC1260505-320 or 420			Aileron Direct
1	MC1260505-12 or 112			Rudder Aft RH
1	MC1260505-319 or 419			Rudder Aft LH
1	MC0510105-203 or 303			Rudder Forward LH
1	MC0510105-204 or 304			Rudder Forward RH
1	MC0510105-93 or 193[6]			Flap Retract
1	MC0510105-94 or 194[6]			Flap Retract
1	MC0510105-92 or 192			Flap Direct RH
1	MC0510105-259 or 359			Flap Direct LH
1	MCS2295A25-111			Chain Elevator Trim Fwd Up
1	MCS2295P25-185			Chain Elevator Trim Fwd Low
1	MCS2295P25-47			Chain Elevator Trim Actuator
6	MCS2294-25			Chain Connecting Link

207[1], T207[1] 1969[1]
S/N 20700001 thru 20700101
Complete Cable Kit P/N CCKT207-01G (Galvanized)
Complete Cable Kit P/N CCKT207-01S (Stainless Steel)
Complete Cable Kit P/N CCKT207-01GE (Galv. Elec. Trim)
Complete Cable Kit P/N CCKT207-01SE (SS Electric Trim)
Complete Pulley Kit P/N PULL-KT-57*

Qty	P/N	Galv	SS	Location
1	MC1260505-1 or 101			Park Brake
1	MC1260417-1 or 2			Park Brake Cable & Tube
1	MC1260078-8 or 108			Aileron Yoke RH
1	MC1260078-7 or 107			Aileron Yoke LH
1	MC1260078-5 or 105			Aileron Yoke Primary
2	MC1260505-55 or 155			Aileron Direct Inboard
2	MC1260505-58 or 158			Aileron Direct Outboard
1	MC1260505-60 or 160			Aileron Carry Thru LH
1	MC1260505-54 or 154			Aileron Carry Thru RH
1	MC1260505-78 or 178			Elevator Down Aft
1	MC1260505-75 or 175			Elevator Up Aft
1	MC1260505-129[2]			Elevator Down Forward
1	MC1260505-130[2]			Elevator Up Forward
1	MC1260505-303 or 403			Elevator Down Spring
1	MCS2295A25-111			Chain Elevator Trim Fwd Up
1	MCS2295-25-43			Chain Elevator Trim Actuator
1	MCS2295P25-185			Chain Elevator Trim Fwd Low
6	MCS2294-25			Chain Connecting Link
1	MC1260505-77 or 177			Elevator Trim Forward LH[8]
1	MC1260505-76 or 176			Elevator Trim Forward RH[8]
1	MC1260505-46 or 146			Elevator Trim Aft LH[8]

Kit continues in next column

Continued from previous column

Qty	P/N	Galv	SS	Location
1	MC1260505-45 or 145			Elevator Trim Aft RH[8]
1	MC0510105-93 or 193[6]			Flap Retract
1	MC0510105-94 or 194[6]			Flap Retract
1	MC0510105-259 or 359			Flap Direct LH
1	MC0510105-92 or 192			Flap Direct RH
1	MC0510105-229 or 329			Rudder Forward LH
1	MC0510105-230 or 330			Rudder Forward RH
1	MC1260505-13 or 113			Rudder Aft LH
1	MC1260505-12 or 112			Rudder Aft RH
1	MC1260204-3[2]			Elec Elevator Trim LH[9]
1	MC1260505-90 or 190			Elec Elevator Trim Fwd RH[9]
1	MC1260505-85 or 185			Elec Elevator Trim Fwd LH[9]
1	MC1260505-57 or 157			Electric Trim Aft RH[9]
1	MC1260505-69 or 169			Electric Trim Aft LH[9]
Available separately for aircraft with camera option				
1	MC1260505-83 or 183			Rudder RH with Camera
1	MC1260505-84 or 184			Rudder LH with Camera
1	MC1260505-89 or 189			Elevator Up with Camera
1	MC1260505-88 or 188			Elevator Down with Camera
1	MC1260505-79 or 179			Elevator Trim RH with Camera
1	MC1260505-80 or 180			Elevator Trim LH with Camera

207[1]/T207[1] 1969[1]
S/N 20700102 thru 20700204
Complete Cable Kit P/N CCKT207-02G (Galvanized)
Complete Cable Kit P/N CCKT207-02S (Stainless Steel)
Complete Cable Kit P/N CCKT207-02GE (Galv. Elec. Trim)
Complete Cable Kit P/N CCKT207-02SE (SS Electric Trim)
Complete Pulley Kit P/N PULL-KT-57*

Qty	P/N	Galv	SS	Location
1	MC1260505-1 or 101			Park Brake
1	MC1260417-1 or 2			Park Brake Cable & Tube
1	MC1260078-8 or 108			Aileron Yoke RH
1	MC1260078-7 or 107			Aileron Yoke LH
1	MC1260078-5 or 105			Aileron Yoke Primary
2	MC1260505-55 or 155			Aileron Direct Inboard
2	MC1260505-58 or 158			Aileron Direct Outboard
1	MC1260505-60 or 160			Aileron Carry Thru LH
1	MC1260505-54 or 154			Aileron Carry Thru RH
1	MC1260505-78 or 178			Elevator Down
1	MC1260505-75 or 175			Elevator Up
1	MC1260505-129[2]			Elevator Down Forward
1	MC1260505-130[2]			Elevator Up Forward
1	MC1260505-303 or 403			Elevator Down Spring
1	MCS2295A25-111			Chain Elevator Trim Fwd Up
1	MCS2295P25-185			Chain Elevator Trim Fwd Low
1	MCS2295P25-47			Chain Elevator Trim Actuator
6	MCS2294-25			Chain Connecting Link
1	MC1260505-94 or 194			Elevator Trim Forward LH[8]
1	MC1260505-93 or 193			Elevator Trim Forward RH[8]
1	MC1260505-46 or 146			Elevator Trim Aft LH[8]
1	MC1260505-91 or 191			Elevator Trim Aft RH[8]
1	MC0510105-93 or 193[6]			Flap Retract
1	MC0510105-94 or 194[6]			Flap Retract
1	MC0510105-259 or 359			Flap Direct LH
1	MC0510105-92 or 192			Flap Direct RH
1	MC0510105-229 or 329			Rudder Forward LH
1	MC0510105-230 or 330			Rudder Forward RH
1	MC1260505-13 or 113			Rudder Aft LH
1	MC1260505-12 or 112			Rudder Aft RH
1	MC1260204-3[2]			Electric Trim LH[9]
1	MC1260505-90 or 190			Electric Trim Forward RH[9]
1	MC1260505-85 or 185			Electric Trim Forward LH[9]
1	MC1260505-57 or 157			Electric Trim Aft RH[9]
1	MC1260505-69 or 169			Electric Trim Aft LH[9]
Available separately for aircraft with camera option				
1	MC1260505-83 or 183			Rudder RH with Camera
1	MC1260505-84 or 184			Rudder LH with Camera
1	MC1260505-89 or 189			Elevator Up with Camera
1	MC1260505-88 or 188			Elevator Down with Camera
1	MC1260505-79 or 179			Elevator Trim RH with Camera
1	MC1260505-80 or 180			Elevator Trim LH with Camera

207[1], T207[1] 1969[1]-1972[1]
S/N 20700205 thru 20700207
Complete Cable Kit P/N CCKT207-03G (Galvanized)
Complete Cable Kit P/N CCKT207-03S (Stainless Steel)
Complete Cable Kit P/N CCKT207-03GE (Galv. Elec. Trim)
Complete Cable Kit P/N CCKT207-03SE (SS Electric Trim)
Complete Pulley Kit P/N PULL-KT-58*

Qty	P/N	Galv	SS	Location
1	MC1260505-97 or 197			Park Brake
1	MC1260417-1 or 2			Park Brake Cable & Tube
1	MC1260078-8 or 108			Aileron Yoke RH
1	MC1260078-7 or 107			Aileron Yoke LH
1	MC1260078-5 or 105			Aileron Yoke Primary
2	MC1260505-55 or 155			Aileron Direct Inboard
2	MC1260505-58 or 158			Aileron Direct Outboard

Kit continues on next page

*** See pages 107-108 for Pulley Kit Components**
[1] Partial model eligibility
[2] Included in both galvanized and stainless kits.
[6] Due to inconsistency in OEM parts these flap cables should be replaced at the same time.
[8] Included in kits for manual trim aircraft only.
[9] Included in kits for electric trim aircraft only.

Continued from previous page

Qty	P/N	Galv	SS	Location
1	MC1260505-60 or 160			Aileron Carry Thru LH
1	MC1260505-54 or 154			Aileron Carry Thru RH
1	MC1260505-78 or 178			Elevator Down Aft
1	MC1260505-75 or 175			Elevator Up Aft
1	MC1260505-129 [2]			Elevator Down Forward
1	MC1260505-130 [2]			Elevator Up Forward
1	MC1260505-303 or 403			Elevator Down Spring
1	MCS2295A25-111			Chain Elevator Trim Fwd Up
1	MCS2295P25-185			Chain Elevator Trim Fwd Low
1	MCS2295P25-47			Chain Elevator Trim Actuator
6	MCS2294-25			Chain Connecting Link
1	MC1260505-94 or 194			Elevator Trim Forward LH [8]
1	MC1260505-93 or 193			Elevator Trim Forward RH [8]
1	MC1260505-46 or 146			Elevator Trim Aft LH [8]
1	MC1260505-91 or 191			Elevator Trim Aft RH [8]
1	MC0510105-93 or 193 [6]			Flap Retract
1	MC0510105-94 or 194 [6]			Flap Retract
1	MC0510105-259 or 359			Flap Direct LH
1	MC0510105-92 or 192			Flap Direct RH
1	MC0510105-229 or 329			Rudder Forward LH
1	MC0510105-230 or 330			Rudder Forward RH
1	MC1260505-13 or 113			Rudder Aft LH
1	MC1260505-12 or 112			Rudder Aft RH
1	MC1260204-3 [2]			Electric Trim LH [9]
1	MC1260505-90 or 190			Electric Trim Forward RH [9]
1	MC1260505-85 or 185			Electric Trim Forward LH [9]
1	MC1260505-57 or 157			Electric Trim Aft RH [9]
1	MC1260505-69 or 169			Electric Trim Aft LH [9]
Available separately for aircraft with camera option				
1	MC1260505-83 or 183			Rudder RH with Camera
1	MC1260505-84 or 184			Rudder LH with Camera
1	MC1260505-89 or 189			Elevator Up with Camera
1	MC1260505-88 or 188			Elevator Down with Camera
1	MC1260505-79 or 179			Elevator Trim RH with Camera
1	MC1260505-80 or 180			Elevator Trim LH with Camera

207 [1], T207 [1] 1972 [1]-1973
S/N 20700208 thru 20700227
Complete Cable Kit P/N CCKT207-04G (Galvanized)
Complete Cable Kit P/N CCKT207-04S (Stainless Steel)
Complete Cable Kit P/N CCKT207-04GE (Galv. Elec. Trim)
Complete Cable Kit P/N CCKT207-04SE (SS Electric Trim)
Complete Pulley Kit P/N PULL-KT-58*

Qty	P/N	Galv	SS	Location
1	MC1260505-97 or 197			Park Brake
1	MC1260417-6 or 7			Park Brake Cable & Tube
1	MC1260078-8 or 108			Aileron Yoke RH
1	MC1260078-7 or 107			Aileron Yoke LH
1	MC1260078-5 or 105			Aileron Yoke Primary
2	MC1260505-55 or 155			Aileron Direct Inboard
2	MC1260505-58 or 158			Aileron Direct Outboard
1	MC1260505-60 or 160			Aileron Carry Thru LH
1	MC1260505-54 or 154			Aileron Carry Thru RH
1	MC1260505-78 or 178			Elevator Down Aft
1	MC1260505-75 or 175			Elevator Up Aft
1	MC1260505-129 [2]			Elevator Down Forward
1	MC1260505-130 [2]			Elevator Up Forward
1	MC1260505-303 or 403			Elevator Down Spring
1	MCS2295A25-111			Chain Elevator Trim Fwd Up
1	MCS2295P25-185			Chain Elevator Trim Fwd Low
1	MCS2295P25-47			Chain Elevator Trim Actuator
6	MCS2294-25			Chain Connecting Link
1	MC1260505-94 or 194			Elevator Trim Forward LH [8]
1	MC1260505-93 or 193			Elevator Trim Forward RH [8]
1	MC1260505-46 or 146			Elevator Trim Aft LH [8]
1	MC1260505-91 or 191			Elevator Trim Aft RH [8]
1	MC0510105-93 or 193 [6]			Flap Retract
1	MC0510105-94 or 194 [6]			Flap Retract
1	MC0510105-259 or 359			Flap Direct LH
1	MC0510105-92 or 192			Flap Direct RH
1	MC0510105-229 or 329			Rudder Forward LH
1	MC0510105-230 or 330			Rudder Forward RH
1	MC1260505-13 or 113			Rudder Aft LH
1	MC1260505-12 or 112			Rudder Aft RH
1	MC1260204-3 [2]			Electric Trim LH [9]
1	MC1260505-90 or 190			Electric Trim Forward RH [9]
1	MC1260505-85 or 185			Electric Trim Forward LH [9]
1	MC1260505-57 or 157			Electric Trim Aft RH [9]
1	MC1260505-69 or 169			Electric Trim Aft LH [9]
Available separately for aircraft with camera option				
1	MC1260505-83 or 183			Rudder RH with Camera
1	MC1260505-84 or 184			Rudder LH with Camera
1	MC1260505-89 or 189			Elevator Up with Camera
1	MC1260505-88 or 188			Elevator Down with Camera
1	MC1260505-79 or 179			Elevator Trim RH with Camera
1	MC1260505-80 or 180			Elevator Trim LH with Camera

207, T207 1974
S/N 20700228 thru 20700267
Complete Cable Kit P/N CCKT207-05G (Galvanized)
Complete Cable Kit P/N CCKT207-05S (Stainless Steel)
Complete Pulley Kit P/N PULL-KT-59*

Qty	P/N	Galv	SS	Location
1	MC1260505-97 or 197			Park Brake
1	MC1260417-6 or 7			Park Brake Cable & Tube

Kit continues in next column

Continued from previous column

Qty	P/N	Galv	SS	Location
1	MC1260078-8 or 108			Aileron Yoke RH
1	MC1260078-7 or 107			Aileron Yoke LH
1	MC1260078-5 or 105			Aileron Yoke Primary
2	MC1260505-55 or 155			Aileron Direct Inboard
2	MC1260505-58 or 158			Aileron Direct Outboard
1	MC1260505-60 or 160			Aileron Carry Thru LH
1	MC1260505-54 or 154			Aileron Carry Thru RH
1	MC1260505-78 or 178			Elevator Down Aft
1	MC1260505-75 or 175			Elevator Up Aft
1	MC1260505-129 or 129			Elevator Down Forward
1	MC1260505-130 or 130			Elevator Up Forward
1	MC1260505-303 or 403			Elevator Down Spring
1	MCS2295A25-111			Chain Elevator Trim Fwd Up
1	MCS2295P25-185			Chain Elevator Trim Fwd Low
1	MCS2295P25-47			Chain Elevator Trim Actuator
6	MCS2294-25			Chain Connecting Link
1	MC1260505-94 or 194			Elevator Trim Forward LH
1	MC1260505-93 or 193			Elevator Trim Forward RH
1	MC1260505-46 or 146			Elevator Trim Aft LH
1	MC1260505-91 or 191			Elevator Trim Aft RH
1	MC0510105-93 or 193 [6]			Flap Retract
1	MC0510105-94 or 194 [6]			Flap Retract
1	MC0510105-259 or 359			Flap Direct LH
1	MC0510105-92 or 192			Flap Direct RH
1	MC0510105-229 or 329			Rudder Forward LH
1	MC0510105-230 or 330			Rudder Forward RH
1	MC1260505-13 or 113			Rudder Aft LH
1	MC1260505-12 or 112			Rudder Aft RH
Available separately for aircraft with camera option				
1	MC1260505-83 or 183			Rudder RH with Camera
1	MC1260505-84 or 184			Rudder LH with Camera
1	MC1260505-89 or 189			Elevator Up with Camera
1	MC1260505-88 or 188			Elevator Down with Camera
1	MC1260505-79 or 179			Elevator Trim RH with Camera
1	MC1260505-80 or 180			Elevator Trim LH with Camera

207,207A [1], T207,T207A [1] 1975-1980 [1]
S/N 20700268 thru 20700646
Complete Cable Kit P/N CCKT207-06G (Galvanized)
Complete Cable Kit P/N CCKT207-06S (Stainless Steel)
Complete Pulley Kit P/N PULL-KT-60* or -61* Note 1

Qty	P/N	Galv	SS	Location
1	MC1260505-97 or 197			Park Brake
1	MC1260417-6 or 7			Park Brake Cable & Tube
1	MC1260078-8 or 108			Aileron Yoke RH
1	MC1260078-7 or 107			Aileron Yoke LH
1	MC1260078-5 or 105			Aileron Yoke Primary
2	MC1260505-55 or 155			Aileron Direct Inboard
2	MC1260505-58 or 158			Aileron Direct Outboard
1	MC1260505-60 or 160			Aileron Carry Thru LH
1	MC1260505-54 or 154			Aileron Carry Thru RH
2	MC1260505-307 or 407			Elevator
1	MCS2295A25-111			Chain Elevator Trim Fwd Up
1	MCS2295P25-185			Chain Elevator Trim Fwd Low
1	MCS2295P25-47			Chain Elevator Trim Actuator
1	MC1260505-94 or 194			Elevator Trim Forward LH
1	MC1260505-93 or 193			Elevator Trim Forward RH
1	MC1260505-46 or 146			Elevator Trim Aft LH
1	MC1260505-91 or 191			Elevator Trim Aft RH
1	MC0510105-93 or 193 [6]			Flap Retract
1	MC0510105-94 or 194 [6]			Flap Retract
1	MC0510105-259 or 359			Flap Direct LH
1	MC0510105-92 or 192			Flap Direct RH
1	MC0510105-229 or 329			Rudder Forward LH
1	MC0510105-230 or 330			Rudder Forward RH
1	MC1260505-13 or 113			Rudder Aft LH
1	MC1260505-12 or 112			Rudder Aft RH
Available separately for aircraft with camera option				
1	MC1260505-83 or 183			Rudder RH with Camera
1	MC1260505-84 or 184			Rudder LH with Camera
2	MC1260505-310 or 410			Elevator with Camera
1	MC1260505-79 or 179			Elevator Trim RH with Camera
1	MC1260505-80 or 180			Elevator Trim LH with Camera

Note 1 S/N 20700268 thru 20700390 USE PULL-KT-60
S/N 20700391 thru 20700646 USE PULL-KT-61

207A [1], T207A 1980-1981 [1]
S/N 20700647 thru 20600672
Complete Cable Kit P/N CCKT207-07G (Galvanized)
Complete Cable Kit P/N CCKT207-07S (Stainless Steel)
Complete Pulley Kit P/N PULL-KT-61*

Qty	P/N	Galv	SS	Location
1	MC1260505-317 or 417			Park Brake
1	MC1260417-6 or 7			Park Brake Cable & Tube
1	MC1260078-8 or 108			Aileron Yoke RH
1	MC1260078-7 or 107			Aileron Yoke LH
1	MC1260078-5 or 105			Aileron Yoke Primary
2	MC1260505-55 or 155			Aileron Direct Inboard
2	MC1260505-58 or 158			Aileron Direct Outboard
1	MC1260505-60 or 160			Aileron Carry Thru LH
1	MC1260505-54 or 154			Aileron Carry Thru RH
2	MC1260505-307 or 407			Elevator
1	MCS2295A25-111			Chain Elevator Trim Fwd Up
1	MCS2295P25-185			Chain Elevator Trim Fwd Low
1	MCS2295P25-47			Chain Elevator Trim Actuator

Kit continues in next column

Continued from previous column

Qty	P/N	Galv	SS	Location
6	MCS2294-25			Chain Connecting Link
1	MC1260505-94 or 194			Elevator Trim Forward LH
1	MC1260505-93 or 193			Elevator Trim Forward RH
1	MC1260505-46 or 146			Elevator Trim Aft LH
1	MC1260505-91 or 191			Elevator Trim Aft RH
1	MC0510105-93 or 193 [6]			Flap Retract
1	MC0510105-94 or 194 [6]			Flap Retract
1	MC0510105-259 or 359			Flap Direct LH
1	MC0510105-92 or 192			Flap Direct RH
1	MC0510105-229 or 329			Rudder Forward LH
1	MC0510105-230 or 330			Rudder Forward RH
1	MC1260505-13 or 113			Rudder Aft LH
1	MC1260505-12 or 112			Rudder Aft RH
Available separately for aircraft with camera option				
1	MC1260505-83 or 183			Rudder RH with Camera
1	MC1260505-84 or 184			Rudder LH with Camera
2	MC1260505-310 or 410			Elevator with Camera
1	MC1260505-79 or 179			Elevator Trim RH with Camera
1	MC1260505-80 or 180			Elevator Trim LH with Camera

207A [1], T207A 1981 [1]
S/N 20700673 thru 20700729
Complete Cable Kit P/N CCKT207-08G (Galvanized)
Complete Cable Kit P/N CCKT207-08S (Stainless Steel)
Complete Pulley Kit P/N PULL-KT-61*

Qty	P/N	Galv	SS	Location
1	MC1260505-317 or 417			Park Brake
1	MC1260417-6 or 7			Park Brake Cable & Tube
1	MC1260078-8 or 108			Aileron Yoke RH
1	MC1260078-7 or 107			Aileron Yoke LH
1	MC1260078-5 or 105			Aileron Yoke Primary
2	MC1260505-55 or 155			Aileron Direct Inboard
2	MC1260505-58 or 158			Aileron Direct Outboard
1	MC1260505-60 or 160			Aileron Carry Thru LH
1	MC1260505-54 or 154			Aileron Carry Thru RH
2	MC1260505-307 or 407			Elevator
1	MCS2295A25-111			Chain Elevator Trim Fwd Up
1	MCS2295P25-185			Chain Elevator Trim Fwd Low
1	MCS2295P25-47			Chain Elevator Trim Actuator
6	MCS2294-25			Chain Connecting Link
1	MC1260505-94 or 194			Elevator Trim Forward LH
1	MC1260505-93 or 193			Elevator Trim Forward RH
1	MC1260505-46 or 146			Elevator Trim Aft LH
1	MC1260505-91 or 191			Elevator Trim Aft RH
1	MC0510105-93 or 193 [6]			Flap Retract
1	MC0510105-94 or 194 [6]			Flap Retract
1	MC0510105-259 or 359			Flap Direct LH
1	MC0510105-92 or 192			Flap Direct RH
1	MC0510105-229 or 329			Rudder Forward LH
1	MC0510105-230 or 330			Rudder Forward RH
1	MC1260505-319 or 419			Rudder Aft LH
1	MC1260505-12 or 112			Rudder Aft RH
Available separately for aircraft with camera option				
1	MC1260505-83 or 183			Rudder RH with Camera
1	MC1260505-84 or 184			Rudder LH with Camera
2	MC1260505-310 or 410			Elevator with Camera
1	MC1260505-79 or 179			Elevator Trim RH with Camera
1	MC1260505-80 or 180			Elevator Trim LH with Camera

207A [1], T207A 1982-1984
S/N 20700730 thru 20700788
Complete Cable Kit P/N CCKT207-09G (Galvanized)
Complete Cable Kit P/N CCKT207-09S (Stainless Steel)
Complete Pulley Kit P/N PULL-KT-61*

Qty	P/N	Galv	SS	Location
1	MC1260505-317 or 417			Park Brake
1	MC1260417-6 or 7			Park Brake Cable & Tube
1	MC1260078-12 or 112			Aileron Yoke RH
1	MC1260078-11 or 111			Aileron Yoke LH
1	MC1260078-10 or 110			Aileron Yoke Primary
2	MC1260505-320 or 420			Aileron Direct Inboard
2	MC1260505-58 or 158			Aileron Direct Outboard
1	MC1260505-60 or 160			Aileron Carry Thru LH
1	MC1260505-54 or 154			Aileron Carry Thru RH
2	MC1260505-307 or 407			Elevator
1	MCS2295A25-111			Chain Elevator Trim Fwd Up
1	MCS2295P25-185			Chain Elevator Trim Fwd Low
1	MCS2295P25-47			Chain Elevator Trim Actuator
6	MCS2294-25			Chain Connecting Link
1	MC1260505-94 or 194			Elevator Trim Forward LH
1	MC1260505-93 or 193			Elevator Trim Forward RH
1	MC1260505-46 or 146			Elevator Trim Aft LH
1	MC1260505-91 or 191			Elevator Trim Aft RH
1	MC0510105-93 or 193 [6]			Flap Retract
1	MC0510105-94 or 194 [6]			Flap Retract
1	MC0510105-259 or 359			Flap Direct LH
1	MC0510105-92 or 192			Flap Direct RH
1	MC0510105-229 or 329			Rudder Forward LH
Available separately for aircraft with camera option				

Kit continues on next page

*** See pages 107-108 for Pulley Kit Components**
[1] Partial model eligibility
[2] Included in both galvanized and stainless kits.
[6] Due to inconsistency in OEM parts these flap cables should be replaced at the same time.
[9] Included in kits for electric trim aircraft only.

Flight Control System
Flight Control Cables - Cessna

Continued from previous page

Qty	P/N	Galv	SS	Location
1	MC1260505-84 or 184			Rudder LH with Camera
2	MC1260505-310 or 410			Elevator with Camera
1	MC1260505-79 or 179			Elevator Trim RH with Camera
1	MC1260505-80 or 180			Elevator Trim LH with Camera
1	MC0510105-230 or 330			Rudder Forward RH
1	MC1260505-319 or 419			Rudder Aft LH
1	MC1260505-12 or 112			Rudder Aft RH

208

See Caravan Section on page 229 for more details.

S/N 20800001 thru 20899999
Complete Cable Kit P/N CCKT208-01 (without autopilot) 10
Complete Cable Kit P/N CCKT208-02 (without autopilot) 11
Complete Cable Kit P/N CCKT208-03 (with autopilot) 12
Complete Cable Kit P/N CCKT208-04 (with autopilot) 13
Complete Cable Kit P/N CCKT208-05 (with autopilot) 14

Qty	P/N	Location
1	MC2660001-100	Elevator
1	MC2660001-101	Elevator
1	MC2660001-102	Elevator
1	MC2660001-103	Elevator
1	MC2660001-104	Rudder
1	MC2660001-106	Rudder
1	MC2660001-107	Rudder
1	MC2660001-108	Rudder
1	MC2660001-109	Elevator Trim
1	MC2660001-110	Elevator Trim
1	MC2660001-112	Elevator Trim
2	MC2660001-114	Aileron
1	MC2660001-118	Aileron LH
1	MC2660001-119	Aileron RH
4	MC2660001-122	Aileron
1	MC2660001-123	Control Column Interconnect
1	MC2660001-124	Control Column Interconnect
1	MC2660001-125	Control Column Interconnect
1	MC2660001-126	Control Column Interconnect
1	MC2660001-155	Elevator Trim
1	MC2660001-156	Elevator Trim
2	MC2660001-157	Aileron
1	MC2660029-13 Note 1	Aileron Trim
1	MC2660029-15 Note 1	Aileron Trim
2	MC2660029-4	Aileron Trim
1	MC9864054-9	Flap Indicator
1	MCS2295-25-101	Chain Elevator Trim Note 2
1	MCS2295-25-107 Note 3	Chain Pitch Trim Servo Note 4
1	MCS2295-25-247	Chain Elevator Trim
1	MCS2295-25-35	Chain Aileron Trim
1	MCS2295-25-43 Note 1	Chain Aileron Trim
2	MCS2295-25-87	Chain Elevator Trim
24	MCS2294-25	Chain Connecting Link

Note 1: S/N 20800082 thru 20899999
Note 2: When equipped with electric trim
Note 3: S/N 20800500 thru 20899999
Note 4: When equipped with pitch trim servo

208B

See Caravan Section on page 229 for more details.

S/N 208B0001 thru 208B9999
Complete Cable Kit P/N CCKT208B-01 (without autopilot) 15
Complete Cable Kit P/N CCKT208B-02 (with autopilot) 16
Complete Cable Kit P/N CCKT208B-03 (with autopilot) 17

Qty	P/N	Location
1	MC2660001-100	Elevator
1	MC2660001-102	Elevator
1	MC2660001-104 Note 1	Rudder
2	MC2660001-105	Flaps
1	MC2660001-107	Rudder
1	MC2660001-109	Elevator Trim
1	MC2660001-110	Elevator Trim
1	MC2660001-112	Elevator Trim
2	MC2660001-114	Aileron
4	MC2660001-122	Aileron
1	MC2660001-123	Control Column Interconnect
1	MC2660001-124	Control Column Interconnect
1	MC2660001-125	Control Column Interconnect
1	MC2660001-126	Control Column Interconnect
1	MC2660001-147	Elevator
1	MC2660001-148	Rudder
1	MC2660001-149	Elevator Trim
1	MC2660001-150	Elevator Trim
1	MC2660001-151	Aileron
1	MC2660001-152	Aileron
1	MC2660001-153	Elevator
1	MC2660001-154	Rudder
2	MC2660001-157	Aileron
2	MC2660029-11	Aileron Trim
1	MC2660029-13	Aileron Trim
1	MC2660029-15	Aileron Trim
1	MC9864054-7	Flap Indicator
1	MCS2295-25-101	Chain Elevator Trim Note 2
1	MCS2295-25-107 Note 3	Chain Pitch Trim Servo Note 4
1	MCS2295-25-247	Chain Elevator Trim
1	MCS2295-25-35	Chain Aileron Trim
1	MCS2295-25-43	Chain Aileron Trim
2	MCS2295-25-87	Chain Elevator Trim

Kit continues in next column

Continued from previous column

Qty	P/N	Galv	SS	Location
24	MCS2294-25			Chain Connecting Link

Note 1: S/N 208B0001 thru 208B2012, 208B2036 and 208B2048 thru 208B9999
Note 2: When equipped with electric trim
Note 3: S/N 208B2000 thru 208B9999
Note 4: When equipped with pitch trim servo

210, 210A 1960-1961

S/N 57001 thru 21057840
Complete Cable Kit P/N CCKT210-01G (Galvanized)
Complete Cable Kit P/N CCKT210-01S (Stainless Steel)
Complete Pulley Kit P/N PULL-KT-62*

Qty	P/N	Galv	SS	Location
1	MC1260105-13 or 113			Park Brake
4	MC1260105-1 2			Aileron Control Tee
2	MC1260105-3 or 103			Aileron Direct
1	MC0510105-13 or 113			Aileron Carry Thru
1	MC1260105-5 or 105			Elevator Up
1	MC1260105-6 or 106			Elevator Down
1	MC1260105-12 or 112			Elevator Down Spring
1	MC1260105-4 or 104			Elevator Trim Forward LH
1	MC1260105-14 or 114			Elevator Trim Aft LH
1	MC1260105-15 or 115			Elevator Trim Forward RH
1	MC1260105-16 or 116			Elevator Trim Aft RH
1	MCS2295P25-321			Chain Elevator Trim Forward
1	MCS2295P25-113			Chain Elevator Trim Aft
4	MCS2294-25			Chain Connecting Link
2	MC1260105-10 or 110			Flap
2	MC1260105-11 or 111			Flap
1	MC1260105-8 or 108			Rudder RH Forward
1	MC1260105-9 or 109			Rudder Aft LH
1	MC1260105-17 or 117			Rudder Aft RH
1	MC1260105-7 or 107			Rudder LH Forward
4	MC0422280			Bellcrank Aileron Bushing

210B 1962

S/N 21057841 thru 21058085
Complete Cable Kit P/N CCKT210-02G (Galvanized)
Complete Cable Kit P/N CCKT210-02S (Stainless Steel)
Complete Pulley Kit P/N PULL-KT-63*

Qty	P/N	Galv	SS	Location
1	MC1260505-1 6			Park Brake
1	MC1260417-1 or 2			Park Brake Cable & Tube
2	MC1260505-3 or 103			Aileron Direct
1	MC0510105-13 or 113			Aileron Carry Thru
1	MC1260105-9 or 109			Elevator Down
1	MC1260505-10 or 110			Elevator Up
1	MC1260505-2 or 102			Elevator Down Spring
1	MCS2295A25-111			Chain Elevator Trim Fwd Low
1	MCS2295P25-155			Chain Elevator Trim Fwd Up
1	MC1260505-5 or 105			Elevator Trim Forward RH
1	MC1260505-6 or 106			Elevator Trim Forward LH
1	MC1260505-7 or 107			Elevator Trim Aft RH
1	MC1260505-8 or 108			Elevator Trim Aft LH
1	MCS2295P25-113			Chain Elevator Trim Actuator
6	MCS2294-25			Chain Connecting Link
2	MC1260505-14 or 114			Flap
2	MC1260505-4 or 104			Flap
1	MC1260505-15 or 115			Rudder Forward LH
1	MC1260505-11 or 111			Rudder Forward RH
1	MC1260505-13 or 113			Rudder Aft LH
1	MC1260505-12 or 112			Rudder Aft RH
4	MC0422280			Bellcrank Aileron Bushing

210C 1963

S/N 21058086 thru 21058220
Complete Cable Kit P/N CCKT210-03G (Galvanized)
Complete Cable Kit P/N CCKT210-03S (Stainless Steel)
Complete Pulley Kit P/N PULL-KT-63*

Qty	P/N	Galv	SS	Location
1	MC1260505-1 2			Park Brake
1	MC1260417-1 or 2			Park Brake Cable & Tube
2	MC1260505-3 or 103			Aileron Direct
1	MC0510105-13 or 113			Aileron Carry Thru
1	MC1260105-9 or 109			Elevator Down
1	MC1260505-10 or 110			Elevator Up
1	MC1260505-2 or 102			Elevator Down Spring
1	MCS2295A25-111			Chain Elevator Trim Fwd Low
1	MCS2295P25-155			Chain Elevator Trim Fwd Up
1	MC1260505-22 or 122			Elevator Trim Forward RH
1	MC1260505-6 or 106			Elevator Trim Forward LH
1	MC1260505-20 or 120			Elevator Trim Aft RH
1	MC1260505-8 or 108			Elevator Trim Aft LH
1	MCS2295P25-113			Chain Elevator Trim Actuator
2	MC1260505-14 or 114			Flap
2	MC1260505-4 or 104			Flap
1	MC1260505-15 or 115			Rudder Forward LH
1	MC1260505-11 or 111			Rudder Forward RH
1	MC1260505-13 or 113			Rudder Aft LH
1	MC1260505-12 or 112			Rudder Aft RH
6	MCS2294-25			Chain Connecting Link
4	MC0422280			Bellcrank Aileron Bushing

210D,E,F, T210F 1964-1966

S/N 21058221 thru 21058818, T210-0001 thru T210-0197
Complete Cable Kit P/N CCKT210-04G (Galvanized)
Complete Cable Kit P/N CCKT210-04S (Stainless Steel)
Complete Pulley Kit P/N PULL-KT-64*

Qty	P/N	Galv	SS	Location
1	MC1260505-1 2			Park Brake
1	MC1260417-1 or 2			Park Brake Cable & Tube
2	MC1260505-25 or 125			Aileron Direct Inboard
2	MC1260505-26 or 126			Aileron Direct Outboard
1	MC1260505-23 or 123			Aileron Carry Thru LH
1	MC1260505-27 or 127			Aileron Carry Thru RH
1	MC1260505-32 or 132			Elevator Down
1	MC1260505-33 or 133			Elevator Up
1	MC1260505-31 or 131			Elevator Down Spring
1	MCS2295A25-111			Chain Elevator Trim Fwd Low
1	MCS2295P25-155			Chain Elevator Trim Fwd Up
1	MC1260505-22 or 122			Elevator Trim Forward RH
1	MC1260505-6 or 106			Elevator Trim Forward LH
1	MC1260505-20 or 120			Elevator Trim Aft RH
1	MC1260505-8 or 108			Elevator Trim Aft LH
1	MCS2295P25-113			Chain Elevator Trim Actuator
1	MC0510105-93 or 193 6			Flap Retract
1	MC0510105-94 or 194 6			Flap Retract
1	MC0510105-91 or 191			Flap Direct LH
1	MC0510105-92 or 192			Flap Direct RH
1	MC1260505-15 or 115			Rudder Forward LH
1	MC1260505-11 or 111			Rudder Forward RH
1	MC1260505-13 or 113			Rudder Aft LH
1	MC1260505-12 or 112			Rudder Aft RH
6	MCS2294-25			Chain Connecting Link

210G 1, T210G 1 1967 1

S/N 21058819 thru 21058829, T210-0198 thru T210-0240
Complete Cable Kit P/N CCKT210-05G (Galvanized)
Complete Cable Kit P/N CCKT210-05S (Stainless Steel)
Complete Pulley Kit P/N PULL-KT-65*

Qty	P/N	Galv	SS	Location
1	MC1260505-1 or 101			Park Brake
1	MC1260417-1 or 2			Park Brake Cable & Tube
1	MC1260078-3 or 103			Aileron Yoke RH
1	MC1260078-2 or 102			Aileron Yoke LH
1	MC120905-3 6			Aileron Yoke Carry Thru
2	MC1260078-4 or 104			Aileron Direct
2	MC1260505-40 or 140			Aileron Direct
1	MC1260505-38 or 138			Aileron Return LH
1	MC1260505-39 or 139			Aileron Return RH
1	MC1260505-32 or 132			Elevator Down
1	MC1260505-33 or 133			Elevator Up
1	MCS2295A25-111			Chain Elevator Trim Fwd Low
1	MCS2295P25-159			Chain Elevator Trim Fwd Up
1	MC1260505-22 or 122			Elevator Trim Forward RH
1	MC1260505-35 or 135			Elevator Trim Forward LH
1	MC1260505-45 or 145			Elevator Trim Aft RH
1	MC1260505-46 or 146			Elevator Trim Aft LH
1	MCS2295-25-43			Chain Elevator Trim Actuator
1	MC1260505-49 or 149			Flap Down LH Act to Trnbkl
1	MC1260505-51 or 151			Flap Down RH Act to Trnbkl
2	MC1260505-47 or 147			Flap Down LH/RH Bell/Tnbkl
2	MC1260505-48 or 148			Flap Up LH/RH Bell/Tnbkl
1	MC1260505-50 or 150			Flap Up LH Trnbkl to Actuator
1	MC1260505-52 or 152			Flap Up RH Trnbkl to Actuator
1	MC1260505-15 or 115			Rudder Forward LH
1	MC1260505-11 or 111			Rudder Forward RH
1	MC1260505-13 or 113			Rudder Aft LH
1	MC1260505-12 or 112			Rudder Aft RH
6	MCS2294-25			Chain Connecting Link

210G 1, T210G 1 1967 1

S/N 21058830 thru 21058936, T210-0241 thru T210-0307
Complete Cable Kit P/N CCKT210-06G (Galvanized)
Complete Cable Kit P/N CCKT210-06S (Stainless Steel)
Complete Pulley Kit P/N PULL-KT-65*

Qty	P/N	Galv	SS	Location
1	MC1260505-1 or 101			Park Brake
1	MC1260417-1 or 2			Park Brake Cable & Tube
1	MC1260078-8 or 108			Aileron Yoke RH
1	MC1260078-7 or 107			Aileron Yoke LH
1	MC1260078-5 or 105			Aileron Yoke Carry Thru
2	MC1260078-9 or 109			Aileron Direct Yoke
2	MC1260505-40 or 140			Aileron Direct Bellcrank
1	MC1260505-38 or 138			Aileron Return LH
1	MC1260505-39 or 139			Aileron Return RH
1	MC1260505-32 or 132			Elevator Down
1	MC1260505-33 or 133			Elevator Up

Kit continues on next page

*** See pages 107-108 for Pulley Kit Components**
1 Partial model eligibility
2 Included in both galvanized and stainless kits.
6 Due to inconsistency in OEM parts these flap cables should be replaced at the same time.
9 Included in kits for electric trim aircraft only.
10 S/N 20800001 thru 20800081 without autopilot
11 S/N 20800082 thru 20899999 without autopilot
12 S/N 20800001 thru 20800081 with autopilot
13 S/N 20800082 thru 20800499 with autopilot
14 S/N 20800500 thru 20899999 with autopilot
15 All serials without autopilot
16 S/N 208B0001 thru 208B1999 with autopilot
17 S/N 208B2000 thru 208B9999 with autopilot

Continued from previous page

Qty	P/N	Galv SS	Location
1	MCS2295A25-111		Chain Elevator Trim Fwd Up
1	MCS2295P25-159		Chain Elevator Trim Fwd Low
1	MC1260505-22 or 122		Elevator Trim Forward RH
1	MC1260505-35 or 135		Elevator Trim Forward LH
1	MC1260505-45 or 145		Elevator Trim Aft RH
1	MC1260505-46 or 146		Elevator Trim Aft LH
1	MCS2295-25-43		Chain Elevator Trim Actuator
1	MC1260505-49 or 149		Flap Down LH Act to Trnbkl
1	MC1260505-51 or 151		Flap Down RH Act to Trnbkl
2	MC1260505-47 or 147		Flap Down LH/RH Bell/Tnbkl
2	MC1260505-48 or 148		Flap Up LH/RH Bell/Tnbkl
1	MC1260505-50 or 150		Flap Up LH Trnbkl to Actuator
1	MC1260505-52 or 152		Flap Up RH Trnbkl to Actuator
1	MC1260505-15 or 115		Rudder Forward LH
1	MC1260505-11 or 111		Rudder Forward RH
1	MC1260505-13 or 113		Rudder Aft LH
1	MC1260505-12 or 112		Rudder Aft RH
6	MCS2294-25		Chain Connecting Link

210H[1], T210H[1] 1968[1]
Serial 21058937 thru 21059030, T210-0308 thru T210-0378
Complete Cable Kit P/N CCKT210-07G (Galvanized)
Complete Cable Kit P/N CCKT210-07S (Stainless Steel)
Complete Cable Kit P/N CCKT210-07GE (Galv. Elec. Trim)
Complete Cable Kit P/N CCKT210-07SE (SS Electric Trim)
Complete Pulley Kit P/N PULL-KT-66*

Qty	P/N	Galv SS	Location
1	MC1260505-1 or 101		Park Brake
1	MC1260417-1 or 2		Park Brake Cable & Tube
1	MC1260078-8 or 108		Aileron Yoke RH
1	MC1260078-7 or 107		Aileron Yoke LH
1	MC1260078-5 or 105		Aileron Yoke Carry Thru
2	MC1260078-9 or 109		Aileron Direct Yoke
2	MC1260505-40 or 140		Aileron Direct Bellcrank
1	MC1260505-38 or 138		Aileron Return LH
1	MC1260505-39 or 139		Aileron Return RH
1	MC1260505-32 or 132		Elevator Down
1	MC1260505-33 or 133		Elevator Up
1	MCS2295A25-111		Chain Elevator Trim Fwd Up
1	MCS2295P25-159		Chain Elevator Trim Fwd Low
1	MC1260505-22 or 122		Elevator Trim Forward RH[8]
1	MC1260505-35 or 135		Elevator Trim Forward LH[8]
1	MC1260505-45 or 145		Elevator Trim Aft RH[8]
1	MC1260505-46 or 146		Elevator Trim Aft LH
1	MCS2295-25-43		Chain Elevator Trim Actuator
1	MC1260505-56 or 156		Elevator Aft RH[9]
1	MC1260505-62 or 162		Electric Trim Forward RH[9]
1	MC1260505-61 or 161		Electric Trim Forward LH[9]
1	MC1260505-167[6]		Electric Trim Cen. LH SS[9]
1	MC1260505-49 or 149		Flap Down LH Act to Trnbkl
1	MC1260505-51 or 151		Flap Down RH Act to Trnbkl
2	MC1260505-47 or 147		Flap Down LH/RH Bell/Tnbkl
2	MC1260505-48 or 148		Flap Up Bellcrank to Trnbkl
1	MC1260505-50 or 150		Flap Up LH Trnbkl to Actuator
1	MC1260505-52 or 152		Flap Up RH Trnbkl to Act
1	MC1260505-15 or 115		Rudder Forward LH
1	MC1260505-11 or 111		Rudder Forward RH
1	MC1260505-13 or 113		Rudder Aft LH
1	MC1260505-12 or 112		Rudder Aft RH
6	MCS2294-25		Chain Connecting Link

210H[1], T210H[1] 1968[1]
S/N 21059031 thru 21059061, T210-0379 thru T210-0392
Complete Cable Kit P/N CCKT210-08G (Galvanized)
Complete Cable Kit P/N CCKT210-08S (Stainless Steel)
Complete Cable Kit P/N CCKT210-08GE (Galv. Elec. Trim)
Complete Cable Kit P/N CCKT210-08SE (SS Electric Trim)
Complete Pulley Kit P/N PULL-KT-67*

Qty	P/N	Galv SS	Location
1	MC1260505-1 or 101		Park Brake
1	MC1260417-1 or 2		Park Brake Cable & Tube
1	MC1260078-8 or 108		Aileron Yoke RH
1	MC1260078-7 or 107		Aileron Yoke LH
1	MC1260078-5 or 105		Aileron Yoke Carry Thru
2	MC1260078-9 or 109		Aileron Direct Yoke
2	MC1260505-40 or 140		Aileron Direct Bellcrank
1	MC1260505-38 or 138		Aileron Return LH
1	MC1260505-39 or 139		Aileron Return RH
1	MC1260505-32 or 132		Elevator Down
1	MC1260505-33 or 133		Elevator Up
1	MCS2295A25-111		Chain Elevator Trim Fwd Up
1	MCS2295P25-159		Chain Elevator Trim Fwd Low
1	MC1260505-22 or 122		Elevator Trim Forward RH[8]
1	MC1260505-35 or 135		Elevator Trim Forward LH[8]
1	MC1260505-45 or 145		Elevator Trim Aft RH[8]
1	MC1260505-46 or 146		Elevator Trim Aft LH
1	MCS2295-25-43		Chain Elevator Trim Actuator
1	MC1260505-56 or 156		Elevator Aft RH[9]
1	MC1260505-62 or 162		Electric Trim Forward RH[9]
1	MC1260505-61 or 161		Electric Trim Forward LH[9]
1	MC1260505-167[2]		Electric Trim Center LH SS[9]
1	MC1260505-73 or 173		Flap Down LH Trnbkl to Act
1	MC1260505-71 or 171		Flap Down RH Trnbkl to Act

Kit continues in next column

Continued from previous column

Qty	P/N	Galv SS	Location
2	MC1260505-48 or 148		Flap Up Bellcrk to Trnbkl
2	MC1260505-47 or 147		Flap Down LH/RH Bellcrank to Trnbkl
1	MC1260505-70 or 170		Flap Up LH Trnbkl to Actuator
1	MC1260505-72 or 172		Flap Up RH Trnbkl to Act
1	MC1260505-15 or 115		Rudder Forward LH
1	MC1260505-11 or 111		Rudder Forward RH
1	MC1260505-13 or 113		Rudder Aft LH
1	MC1260505-12 or 112		Rudder Aft RH
6	MCS2294-25		Chain Connecting Link

210J[1], T210J[1] 1969[1]
S/N 21059062 thru 21059100, T210-0393 thru T210-0407
Complete Cable Kit P/N CCKT210-09G (Galvanized)
Complete Cable Kit P/N CCKT210-09S (Stainless Steel)
Complete Cable Kit P/N CCKT210-09GE (Galv. Elec. Trim)
Complete Cable Kit P/N CCKT210-09SE (SS Electric Trim)
Complete Pulley Kit P/N PULL-KT-68*

Qty	P/N	Galv SS	Location
1	MC1260505-1 or 101		Park Brake
1	MC1260417-1 or 2		Park Brake Cable & Tube
1	MC1260078-8 or 108		Aileron Yoke RH
1	MC1260078-7 or 107		Aileron Yoke LH
1	MC1260078-5 or 105		Aileron Yoke Carry Thru
2	MC1260208-1[2]		Aileron/Rudder Int Lower
2	MC1260505-174[2]		Aileron/Rudder Int Upper
1	MC1260505-187[2]		Aileron/Rud Int Up with Tube
2	MC1260078-9 or 109		Aileron Direct Yoke
2	MC1260505-40 or 140		Aileron Direct Bellcrank
1	MC1260505-38 or 138		Aileron Return LH
1	MC1260505-39 or 139		Aileron Return RH
1	MC1260505-32 or 132		Elevator Down
1	MC1260505-33 or 133		Elevator Up
1	MCS2295A25-111		Chain Elevator Trim Fwd Up
1	MCS2295P25-159		Chain Elevator Trim Fwd Low
1	MC1260505-22 or 122		Elevator Trim Forward RH[8]
1	MC1260505-35 or 135		Elevator Trim Forward LH[8]
1	MC1260505-45 or 145		Elevator Trim Aft RH[8]
1	MC1260505-46 or 146		Elevator Trim Aft LH
1	MCS2295-25-43		Chain Elevator Trim Actuator
1	MC1260505-56 or 156		Elevator Aft RH[9]
1	MC1260505-62 or 162		Electric Trim Forward RH[9]
1	MC1260505-61 or 161		Electric Trim Forward LH[9]
1	MC1260505-167[2]		Electric Trim Cen. LH SS[9]
1	MC1260505-73 or 173		Flap Down LH Trnbkl to Act
1	MC1260505-71 or 171		Flap Down RH Trnbkl to Act
2	MC1260505-48 or 148		Flp Up Bellcrank to Trnbkl
2	MC1260505-47 or 147		Flap Down LH/RH Bellcrank to Turnbuckle
1	MC1260505-70 or 170		Flap Up LH Turnbuckle to Act
1	MC1260505-72 or 172		Flap Up RH Turnbuckle to Act
1	MC1260505-15 or 115		Rudder Forward LH
1	MC1260505-11 or 111		Rudder Forward RH
1	MC1260505-13 or 113		Rudder Aft LH
1	MC1260505-12 or 112		Rudder Aft RH
6	MCS2294-25		Chain Connecting Link

210J[1], T210J[1] 1969[1]
S/N 21059101 thru 21059199, T210-0408 thru T210-0454
Complete Cable Kit P/N CCKT210-10G (Galvanized)
Complete Cable Kit P/N CCKT210-10S (Stainless Steel)
Complete Cable Kit P/N CCKT210-10GE (Galv. Elec. Trim)
Complete Cable Kit P/N CCKT210-10SE (SS Electric Trim)
Complete Pulley Kit P/N PULL-KT-68*

Qty	P/N	Galv SS	Location
1	MC1260505-1 or 101		Park Brake
1	MC1260417-1 or 2		Park Brake Cable & Tube
1	MC1260078-8 or 108		Aileron Yoke RH
1	MC1260078-7 or 107		Aileron Yoke LH
1	MC1260078-5 or 105		Aileron Yoke Carry Thru
2	MC1260208-1[2]		Aileron/Rudder Int Lower
2	MC1260505-174[2]		Aileron/Rudder Int Upper
1	MC1260505-187[2]		Ail/Rud Int Upper w/Tube
2	MC1260078-9 or 109		Aileron Direct Yoke
2	MC1260505-40 or 140		Aileron Direct Bellcrank
1	MC1260505-38 or 138		Aileron Return LH
1	MC1260505-39 or 139		Aileron Return RH
1	MC1260505-32 or 132		Elevator Down
1	MC1260505-33 or 133		Elevator Up
1	MCS2295A25-111		Chain Elevator Trim Fwd Up
1	MCS2295P25-159		Chain Elevator Trim Fwd Low
1	MC1260505-22 or 122		Elevator Trim Forward RH[8]
1	MC1260505-35 or 135		Elevator Trim Forward LH[8]
1	MC1260505-45 or 145		Elevator Trim Aft RH[8]
1	MC1260505-46 or 146		Elevator Trim Aft LH
1	MCS2295-25-43		Chain Elev Trim Actuator
1	MC1260505-56 or 156		Elevator Aft RH[9]
1	MC1260505-62 or 162		Electric Trim Forward RH[9]
1	MC1260505-61 or 161		Electric Trim Forward LH[9]
1	MC1260204-1[2]		Elevator Trim Cen. LH SS[9]
1	MC1260505-73 or 173		Flap Down LH Trnbkl to Act
1	MC1260505-71 or 171		Flap Down RH Trnbkl to Act
2	MC1260505-48 or 148		Flap Up Bellcrk to Trnbkl

Kit continues in next column

Continued from previous column

Qty	P/N	Galv SS	Location
2	MC1260505-47 or 147		Flap Down LH/RH Bellcrank to Turnbuckle
1	MC1260505-70 or 170		Flap Up LH Turnbuckle to Act
1	MC1260505-72 or 172		Flap Up RH Turnbuckle to Act
1	MC1260505-15 or 115		Rudder Forward LH
1	MC1260505-11 or 111		Rudder Forward RH
1	MC1260505-13 or 113		Rudder Aft LH
1	MC1260505-12 or 112		Rudder Aft RH
6	MCS2294-25		Chain Connecting Link

210K[1], T210K[1] 1970[1]
S/N 21059200 thru 21059323
Complete Cable Kit P/N CCKT210-11G (Galvanized)
Complete Cable Kit P/N CCKT210-11S (Stainless Steel)
Complete Pulley Kit P/N PULL-KT-69*

Qty	P/N	Galv SS	Location
1	MC1260505-1 or 101		Park Brake
1	MC1260417-1 or 2		Park Brake Cable & Tube
1	MC1260078-8 or 108		Aileron Yoke RH
1	MC1260078-7 or 107		Aileron Yoke LH
1	MC1260078-5 or 105		Aileron Yoke Carry Thru
2	MC1260208-1[2]		Aileron/Rudder Int Lower
1	MC1260505-174[2]		Aileron/Rudder Int Upper
1	MC1260505-187[2]		Ail/Rud Int Upper w/Tube
2	MC1260078-9 or 109		Aileron Direct Yoke
2	MC1260505-40 or 140		Aileron Direct Bellcrank
1	MC1260505-38 or 138		Aileron Return LH
1	MC1260505-39 or 139		Aileron Return RH
1	MC1260475-7 or 107		Elevator Up
1	MC1260475-8 or 108		Elevator Down
1	MC1260505-96 or 196		Elevator Down Spring
1	MCS2295A25-111		Chain Elevator Trim Fwd Up
1	MCS2295P25-159		Chain Elevator Trim Fwd Low
1	MC1260475-1 or 101		Elevator Trim Forward LH
1	MC1260475-2 or 102		Elevator Trim Forward RH
1	MC1260475-9 or 109		Elevator Trim Aft LH
1	MC1260475-10 or 110		Elevator Trim Aft RH
1	MC1260660-3[2]		Elevator Trim Electric Drive
1	MC1260505-73 or 173		Flap Down LH Trnbkl to Act
1	MC1260505-71 or 171		Flap Down RH Trnbkl to Act
2	MC1260505-48 or 148		Flap Up Bellcrank to Trnbkl
2	MC1260505-47 or 147		Flap Down Bellcrk to Trnbkl
1	MC1260505-70 or 170		Flap Up LH Turnbuckle to Act
1	MC1260505-72 or 172		Flap Up RH Turnbuckle to Act
1	MC1260475-5 or 105		Rudder Forward LH
1	MC1260475-6 or 106		Rudder Forward RH
1	MC1260505-13 or 113		Rudder Aft LH
1	MC1260505-12 or 112		Rudder Aft RH
1	MCS2295P25-55		Chain Elevator Trim Actuator
6	MCS2294-25		Chain Connecting Link

210K[1], T210K[1] 1970[1]-1971[1]
S/N 21059324 thru 21059465
Complete Cable Kit P/N CCKT210-12G (Galvanized)
Complete Cable Kit P/N CCKT210-12S (Stainless Steel)
Complete Pulley Kit P/N PULL-KT-69*

Qty	P/N	Galv SS	Location
1	MC1260505-1 or 101		Park Brake
1	MC1260417-1 or 2		Park Brake Cable & Tube
1	MC1260078-8 or 108		Aileron Yoke RH
1	MC1260078-7 or 107		Aileron Yoke LH
1	MC1260078-5 or 105		Aileron Yoke Carry Thru
2	MC1260208-1[2]		Aileron/Rudder Int Lower
1	MC1260505-174[2]		Aileron/Rudder Int Upper
1	MC1260505-187[2]		Ail/Rud Int Upper w/Tube
2	MC1260078-9 or 109		Aileron Direct Yoke
2	MC1260505-40 or 140		Aileron Direct Bellcrank
1	MC1260505-38 or 138		Aileron Return LH
1	MC1260505-39 or 139		Aileron Return RH
1	MC1260475-7 or 107		Elevator Up
1	MC1260475-8 or 108		Elevator Down
1	MC1260505-96 or 196		Elevator Down Spring
1	MCS2295A25-111		Chain Elevator Trim Fwd Up
1	MCS2295P25-159		Chain Elevator Trim Fwd Low
1	MC1260475-1 or 101		Elevator Trim Forward LH
1	MC1260475-2 or 102		Elevator Trim Forward RH
1	MC1260475-9 or 109		Elevator Trim Aft LH
1	MC1260475-10 or 110		Elevator Trim Aft RH
1	MC1260660-3[2]		Elevator Trim Elec Drive
1	MC1260505-73 or 173		Flap Down LH Trnbkle to Act
1	MC1260505-71 or 171		Flap Down RH Trnbkl to Act
2	MC1260505-48 or 148		Flap Up Bellcrk to Trnbkl
2	MC1260505-47 or 147		Flap Down Bellcrk to Trnbkl
1	MC1260505-70 or 170		Flap Up LH Turnbuckle to Act
1	MC1260505-72 or 172		Flap Up RH Turnbuckle to Act

Kit continues on next page

*** See pages 107-108 for Pulley Kit Components**
[1] Partial model eligibility
[2] Included in both galvanized and stainless kits.
[6] Due to inconsistency in OEM parts these flap cables should be replaced at the same time.
[8] Included in kits for manual trim aircraft only.
[9] Included in kits for electric trim aircraft only.

Continued from previous page

Qty	P/N	Galv SS	Location
1	MC1260475-5 or 105		Rudder Forward LH
1	MC1260475-6 or 106		Rudder Forward RH
1	MC1260505-13 or 113		Rudder Aft LH
1	MC1260505-12 or 112		Rudder Aft RH
1	MCS2295P25-55		Chain Elevator Trim Actuator
6	MCS2294-25		Chain Connecting Link

210K1,L1, T210K1,L1 1971[1]-1972[1]
S/N 21059466 thru 21059555
Complete Cable Kit P/N CCKT210-13G (Galvanized)
Complete Cable Kit P/N CCKT210-13S (Stainless Steel)
Complete Pulley Kit P/N PULL-KT-69*

Qty	P/N	Galv SS	Location
1	MC1260505-97 or 197		Park Brake
1	MC1260417-1 or 2		Park Brake Cable & Tube
1	MC1260078-8 or 108		Aileron Yoke RH
1	MC1260078-7 or 107		Aileron Yoke LH
1	MC1260078-5 or 105		Aileron Yoke Carry Thru
2	MC1260208-1[2]		Aileron/Rudder Int Lower
1	MC1260505-174[2]		Aileron/Rudder Int Upper
1	MC1260505-187[2]		Ail/Rud Int Upper w/Tube
2	MC1260078-9 or 109		Aileron Direct Yoke
2	MC1260505-40 or 140		Aileron Direct Bellcrank
1	MC1260505-38 or 138		Aileron Return LH
1	MC1260505-39 or 139		Aileron Return RH
1	MC1260475-7 or 107		Elevator Up
1	MC1260475-8 or 108		Elevator Down
1	MC1260505-96 or 196		Elevator Down Spring
1	MCS2295A25-111		Chain Elevator Trim Fwd Up
1	MCS2295P25-159		Chain Elevator Trim Fwd Low
1	MC1260475-1 or 101		Elevator Trim Forward LH
1	MC1260475-2 or 102		Elevator Trim Forward RH
1	MC1260475-9 or 109		Elevator Trim Aft LH
1	MC1260475-10 or 110		Elevator Trim Aft RH
1	MC1260660-3[2]		Elevator Trim Electric Drive
1	MC1260505-73 or 173		Flap Down LH Trnbkl to Act
1	MC1260505-71 or 171		Flap Down RH Trnbkl to Act
2	MC1260505-48 or 148		Flap Up Bellcrk to Trnbkle
2	MC1260505-47 or 147		Flap Down LH/RH Bellcrank to Turnbuckle
1	MC1260505-70 or 170		Flap Up LH Trnbkl to Act
1	MC1260505-72 or 172		Flap Up RH Trnbkl to Act
1	MC1260475-5 or 105		Rudder Forward LH
1	MC1260475-6 or 106		Rudder Forward RH
1	MC1260505-13 or 113		Rudder Aft LH
1	MC1260505-12 or 112		Rudder Aft RH
1	MCS2295P25-55		Chain Elevator Trim Actuator
6	MCS2294-25		Chain Connecting Link

210L1, T210L1 1972[1]-1973
S/N 21059556 thru 21060089
Complete Cable Kit P/N CCKT210-14G (Galvanized)
Complete Cable Kit P/N CCKT210-14S (Stainless Steel)
Complete Pulley Kit P/N PULL-KT-69*

Qty	P/N	Galv SS	Location
1	MC1260505-97 or 197		Park Brake
1	MC1260417-6 or 7		Park Brake Cable & Tube
1	MC1260078-8 or 108		Aileron Yoke RH
1	MC1260078-7 or 107		Aileron Yoke LH
1	MC1260078-5 or 105		Aileron Yoke Carry Thru
2	MC1260208-1[2]		Aileron/Rudder Int Lower
1	MC1260505-174[2]		Aileron/Rudder Int Upper
1	MC1260505-187[2]		Ail/Rud Int Upper w/Tube
2	MC1260078-9 or 109		Aileron Direct Yoke
2	MC1260505-40 or 140		Aileron Direct Bellcrank
1	MC1260505-38 or 138		Aileron Return LH
1	MC1260505-39 or 139		Aileron Return RH
1	MC1260475-7 or 107		Elevator Up
1	MC1260475-8 or 108		Elevator Down
1	MC1260505-96 or 196		Elevator Down Spring
1	MCS2295A25-111		Chain Elevator Trim Fwd Up
1	MCS2295P25-159		Chain Elevator Trim Fwd Low
1	MC1260475-1 or 101		Elevator Trim Forward LH
1	MC1260475-2 or 102		Elevator Trim Forward RH
1	MC1260475-9 or 109		Elevator Trim Aft LH
1	MC1260475-10 or 110		Elevator Trim Aft RH
1	MC1260660-3[2]		Elevator Trim Electric Drive
1	MC1260505-73 or 173		Flap Down LH Trnbkl to Act
1	MC1260505-71 or 171		Flap Down RH Trnbkl to Act
2	MC1260505-48 or 148		Flap Up Bellcrk to Trnbkle
2	MC1260505-47 or 147		Flap Down LH/RH Bellcrank to Turnbuckle
1	MC1260505-70 or 170		Flap Up LH Turnbuckle to Act
1	MC1260505-72 or 172		Flap Up RH Turnbuckle to Act
1	MC1260475-5 or 105		Rudder Forward LH
1	MC1260475-6 or 106		Rudder Forward RH
1	MC1260505-13 or 113		Rudder Aft LH
1	MC1260505-12 or 112		Rudder Aft RH
1	MCS2295P25-55		Chain Elevator Trim Actuator
6	MCS2294-25		Chain Connecting Link

210L1,M1, T210L1,M1 1974-1977
S/N 21060090 thru 21062273
Complete Cable Kit P/N CCKT210-15G (Galvanized)
Complete Cable Kit P/N CCKT210-15S (Stainless Steel)
Complete Pulley Kit P/N PULL-KT-71*

Qty	P/N	Galv SS	Location
1	MC1260505-97 or 197		Park Brake
1	MC1260417-6 or 7		Park Brake Cable & Tube
1	MC1260078-8 or 108		Aileron Yoke RH
1	MC1260078-7 or 107		Aileron Yoke LH
1	MC1260078-5 or 105		Aileron Yoke Carry Thru
2	MC1260208-1[2]		Aileron/Rudder Int Lower
1	MC1260505-174[2]		Aileron/Rudder Int Upper
1	MC1260505-187[2]		Ail/Rud Int Upper w/Tube
2	MC1260078-9 or 109		Aileron Direct Yoke
2	MC1260505-40 or 140		Aileron Direct Bellcrank
1	MC1260505-38 or 138		Aileron Return LH
1	MC1260505-39 or 139		Aileron Return RH
1	MC1260475-7 or 107		Elevator Up
1	MC1260475-8 or 108		Elevator Down
1	MC1260505-96 or 196		Elevator Down Spring
1	MCS2295A25-111		Chain Elevator Trim Fwd Up
1	MCS2295P25-159		Chain Elevator Trim Fwd Low
1	MC1260475-1 or 101		Elevator Trim Forward LH
1	MC1260475-2 or 102		Elevator Trim Forward RH
1	MC1260475-9 or 109		Elevator Trim Aft LH
1	MC1260475-10 or 110		Elevator Trim Aft RH
1	MC1260505-73 or 173		Flap Down LH Trnbkl to Act
1	MC1260505-71 or 171		Flap Down RH Trnbkl to Act
2	MC1260505-48 or 148		Flap Up Bellcrk to Trnbkl
2	MC1260505-47 or 147		Flap Down LH/RH Bellcrank to Turnbuckle
1	MC1260505-70 or 170		Flap Up LH Turnbuckle to Act
1	MC1260505-72 or 172		Flap Up RH Turnbuckle to Act
1	MC1260475-5 or 105		Rudder Forward LH
1	MC1260475-6 or 106		Rudder Forward RH
1	MC1260505-13 or 113		Rudder Aft LH
1	MC1260505-12 or 112		Rudder Aft RH
1	MCS2295P25-55		Chain Elev Trim Actuator
6	MCS2294-25		Chain Connecting Link

210M1,N1, T210,M1,N1 1978-1980[1]
S/N 21062274 thru 21064084
Complete Cable Kit P/N CCKT210-16G (Galvanized)
Complete Cable Kit P/N CCKT210-16S (Stainless Steel)
Complete Pulley Kit P/N PULL-KT-71*

Qty	P/N	Galv SS	Location
1	MC1260505-97 or 197		Park Brake
1	MC1260417-6 or 7		Park Brake Cable & Tube
1	MC1260078-11 or 111		Aileron Yoke LH
1	MC1260078-12 or 112		Aileron Yoke RH
1	MC1260078-10 or 110		Aileron Yoke Carry Thru
2	MC1260208-1[2]		Aileron/Rudder Int Lower
1	MC1260505-174[2]		Aileron/Rudder Int Upper
1	MC1260505-187[2]		Ail/Rud Int Upper w/Tube
2	MC1260078-13 or 113		Aileron Direct Yoke
2	MC1260505-40 or 140		Aileron Direct Bellcrank
1	MC1260505-314 or 414		Aileron Return LH
1	MC1260505-315 or 415		Aileron Return RH
1	MC1260475-12 or 112		Elevator Up
1	MC1260475-13 or 113		Elevator Down
1	MC1260505-96 or 196		Elevator Down Spring
1	MCS2295A25-111		Chain Elevator Trim Fwd Up
1	MCS2295P25-159		Chain Elevator Trim Fwd Low
1	MC1260475-1 or 101		Elevator Trim Forward LH
1	MC1260475-2 or 102		Elevator Trim Forward RH
1	MC1260475-9 or 109		Elevator Trim Aft LH
1	MC1260475-10 or 110		Elevator Trim Aft RH
1	MC1260505-73 or 173		Flap Down LH Trnbkl to Act
1	MC1260505-71 or 171		Flap Down RH Trnbkl to Act
2	MC1260505-48 or 148		Flap Up Bellcrk to Trnbkl
2	MC1260505-47 or 147		Flap Down LH/RH Bellcrank to Turnbuckle
1	MC1260505-70 or 170		Flap Up LH Turnbuckle to Act
1	MC1260505-72 or 172		Flap Up RH Turnbuckle to Act
1	MC1260475-5 or 105		Rudder Forward LH
1	MC1260475-6 or 106		Rudder Forward RH
1	MC1260505-13 or 113		Rudder Aft LH
1	MC1260505-12 or 112		Rudder Aft RH
1	MCS2295P25-55		Chain Elevator Trim Actuator
6	MCS2294-25		Chain Connecting Link

210N1, T210N1 1980[1]
S/N 21064085 thru 21064135
Complete Cable Kit P/N CCKT210-17G (Galvanized)
Complete Cable Kit P/N CCKT210-17S (Stainless Steel)
Complete Pulley Kit P/N PULL-KT-71*

Qty	P/N	Galv SS	Location
1	MC1260505-317 or 417		Park Brake
1	MC1260078-11 or 111		Aileron Yoke LH
1	MC1260078-12 or 112		Aileron Yoke RH
1	MC1260078-10 or 110		Aileron Yoke Carry Thru
2	MC1260208-1[2]		Aileron/Rudder Int Lower
1	MC1260505-174[2]		Aileron/Rudder Int Upper
1	MC1260505-187[2]		Ail/Rud Int Upper w/Tube
2	MC1260078-13 or 113		Aileron Direct Yoke
2	MC1260505-40 or 140		Aileron Direct Bellcrank

Kit continues in next column

Continued from previous column

Qty	P/N	Galv SS	Location
1	MC1260505-314 or 414		Aileron Return LH
1	MC1260505-315 or 415		Aileron Return RH
1	MC1260475-12 or 112		Elevator Up
1	MC1260475-13 or 113		Elevator Down
1	MC1260505-96 or 196		Elevator Down Spring
1	MCS2295A25-111		Chain Elevator Trim Fwd Up
1	MCS2295P25-159		Chain Elevator Trim Fwd Low
1	MC1260475-1 or 101		Elevator Trim Forward LH
1	MC1260475-2 or 102		Elevator Trim Forward RH
1	MC1260475-9 or 109		Elevator Trim Aft LH
1	MC1260475-10 or 110		Elevator Trim Aft RH
1	MC1260505-73 or 173		Flap Down LH Trnbkl to Act
1	MC1260505-71 or 171		Flap Down RH Trnbkl to Act
2	MC1260505-48 or 148		Flap Up Bellcrk to Trnbkl
2	MC1260505-47 or 147		Flap Down LH/RH Bellcrank to Turnbuckle
1	MC1260505-70 or 170		Flap Up LH Turnbuckle to Act
1	MC1260505-72 or 172		Flap Up RH Turnbuckle to Act
1	MC1260475-5 or 105		Rudder Forward LH
1	MC1260475-6 or 106		Rudder Forward RH
1	MC1260505-13 or 113		Rudder Aft LH
1	MC1260505-12 or 112		Rudder Aft RH
1	MCS2295P25-55		Chain Elevator Trim Actuator
6	MCS2294-25		Chain Connecting Link

210N1, T210N1 1981[1]
S/N 21064136 thru 21064185
Complete Cable Kit P/N CCKT210-18G (Galvanized)
Complete Cable Kit P/N CCKT210-18S (Stainless Steel)
Complete Pulley Kit P/N PULL-KT-77*

Qty	P/N	Galv SS	Location
1	MC1260417-6 or 7		Park Brake Cable & Tube
1	MC1260505-317 or 417		Park Brake
1	MC1260078-11 or 111		Aileron Yoke LH
1	MC1260078-12 or 112		Aileron Yoke RH
1	MC1260078-10 or 110		Aileron Yoke Carry Thru
2	MC1260208-1[2]		Aileron/Rudder Int Lower
1	MC1260505-174[2]		Aileron/Rudder Int Upper
1	MC1260505-187[2]		Ail/Rud Int Upper w/Tube
2	MC1260078-13 or 113		Aileron Direct Yoke
2	MC1260505-40 or 140		Aileron Direct Bellcrank
1	MC1260505-314 or 414		Aileron Return LH
1	MC1260505-315 or 415		Aileron Return RH
1	MC1260475-12 or 112		Elevator Up
1	MC1260475-13 or 113		Elevator Down
1	MC1260505-96 or 196		Elevator Down Spring
1	MCS2295A25-111		Chain Elevator Trim Fwd Up
1	MCS2295P25-159		Chain Elevator Trim Fwd Low
1	MC1260475-1 or 101		Elevator Trim Forward LH
1	MC1260475-2 or 102		Elevator Trim Forward RH
1	MCS2295P25-55		Chain Elevator Trim Actuator
1	MC1260475-9 or 109		Elevator Trim Aft LH
1	MC1260475-10 or 110		Elevator Trim Aft RH
1	MC1260505-73 or 173		Flap Down LH Trnbkl to Act
1	MC1260505-71 or 171		Flap Down RH Trnbkl to Act
2	MC1260505-48 or 148		Flap Up Bellcrk to Trnbkl
2	MC1260505-47 or 147		Flap Down LH/RH Bellcrank to Turnbuckle
1	MC1260505-70 or 170		Flap Up LH Trnbkl to Act
1	MC1260505-72 or 172		Flap Up RH Trnbkl to Act
1	MC1260475-5 or 105		Rudder Forward LH
1	MC1260475-6 or 106		Rudder Forward RH
1	MC1260505-13 or 113		Rudder Aft LH
1	MC1260505-12 or 112		Rudder Aft RH
6	MCS2294-25		Chain Connecting Link

210N1, T210N1 1981[1]-1982
S/N 21064186 thru 21064772
Complete Cable Kit P/N CCKT210-19G (Galvanized)
Complete Cable Kit P/N CCKT210-19S (Stainless Steel)
Complete Pulley Kit P/N PULL-KT-77*

Qty	P/N	Galv SS	Location
1	MC1260417-6 or 7		Park Brake Cable & Tube
1	MC1260505-317 or 417		Park Brake
1	MC1260078-11 or 111		Aileron Yoke LH
1	MC1260078-12 or 112		Aileron Yoke RH
1	MC1260078-10 or 110		Aileron Yoke Carry Thru
2	MC1260208-1[2]		Aileron/Rudder Int Lower
1	MC1260505-174[2]		Aileron/Rudder Int Upper
1	MC1260505-187[2]		Ail/Rud Int Upper w/Tube
2	MC1260078-13 or 113		Aileron Direct Yoke
2	MC1260505-40 or 140		Aileron Direct Bellcrank
1	MC1260505-314 or 414		Aileron Return LH
1	MC1260505-315 or 415		Aileron Return RH
1	MC1260475-12 or 112		Elevator Up
1	MC1260475-13 or 113		Elevator Down
1	MC1260505-96 or 196		Elevator Down Spring
1	MCS2295A25-111		Chain Elevator Trim Fwd Up
1	MCS2295P25-159		Chain Elevator Trim Fwd Low
1	MC1260475-1 or 101		Elevator Trim Forward LH
1	MC1260475-2 or 102		Elevator Trim Forward RH

Kit continues on next page

*** See pages 107-108 for Pulley Kit Components**
1 Partial model eligibility
2 Included in both galvanized and stainless kits.
8 Included in kits for manual trim aircraft only.
9 Included in kits for electric trim aircraft only.

Continued from previous page

Qty	P/N	Galv	SS	Location
1	MCS2295P25-55			Chain Elevator Trim Actuator
1	MC1260475-9 or 109			Elevator Trim Aft LH
1	MC1260475-10 or 110			Elevator Trim Aft RH
1	MC1260505-73 or 173			Flap Down LH Trnbkl to Act
1	MC1260505-71 or 171			Flap Down RH Trnbkl to Act
2	MC1260505-48 or 148			Flap Up Bellcrank to Trnbkl
2	MC1260505-47 or 147			Flap Down LH/RH Bellcrank to Turnbuckle
1	MC1260505-70 or 170			Flap Up LH Turnbuckle to Act
1	MC1260505-72 or 172			Flap Up RH Turnbuckle to Act
1	MC1260475-5 or 105			Rudder Forward LH
1	MC1260475-6 or 106			Rudder Forward RH
1	MC1260505-319 or 419			Rudder Aft LH
1	MC1260505-12 or 112			Rudder Aft RH
6	MCS2294-25			Chain Connecting Link

210N[1], T210N[1] 1983-1984
S/N 21064773 thru 21064897
Complete Cable Kit P/N CCKT210-20G (Galvanized)
Complete Cable Kit P/N CCKT210-20S (Stainless Steel)
Complete Pulley Kit P/N PULL-KT-77*

Qty	P/N	Galv	SS	Location
1	MC1260417-6 or 7			Park Brake Cable & Tube
1	MC1260505-317 or 417			Park Brake
1	MC1260078-11 or 111			Aileron Yoke LH
1	MC1260078-12 or 112			Aileron Yoke RH
1	MC1260078-10 or 110			Aileron Yoke Carry Thru
2	MC1260208-1[2]			Aileron/Rudder Int Lower
1	MC1260505-174[2]			Aileron/Rudder Int Upper
1	MC1260505-187[2]			Ail/Rud Int Upper w/Tube
2	MC1260078-14 or 114			Aileron Direct Yoke
2	MC1260505-321 or 421			Aileron Direct Bellcrank
1	MC1260505-314 or 414			Aileron Return LH
1	MC1260505-315 or 415			Aileron Return RH
1	MC1260475-12 or 112			Elevator Up
1	MC1260475-13 or 113			Elevator Down
1	MC1260505-96 or 196			Elevator Down Spring
1	MCS2295A25-111			Chain Elevator Trim Fwd Up
1	MCS2295P25-159			Chain Elevator Trim Fwd Low
1	MC1260475-1 or 101			Elevator Trim Forward LH
1	MC1260475-2 or 102			Elevator Trim Forward RH
1	MCS2295P25-55			Chain Elevator Trim Actuator
1	MC1260475-9 or 109			Elevator Trim Aft LH
1	MC1260475-10 or 110			Elevator Trim Aft RH
1	MC1260505-73 or 173			Flap Down LH Trnbkl to Act
1	MC1260505-71 or 171			Flap Down RH Trnbkl to Act
2	MC1260505-48 or 148			Flap Up Bellcrank to Trnbkl
2	MC1260505-47 or 147			Flap Down LH/RH Bellcrank to Turnbuckle
1	MC1260505-70 or 170			Flap Up LH Trnbkl to Act
1	MC1260505-72 or 172			Flap Up RH Trnbkl to Act
1	MC1260475-5 or 105			Rudder Forward LH
1	MC1260475-6 or 106			Rudder Forward RH
1	MC1260505-319 or 419			Rudder Aft LH
1	MC1260505-12 or 112			Rudder Aft RH
6	MCS2294-25			Chain Connecting Link

210R, T210R 1985-1986
S/N 21064898 thru 2165009
Complete Cable Kit P/N CCKT210-21G (Galvanized)
Complete Cable Kit P/N CCKT210-21S (Stainless Steel)
Complete Pulley Kit P/N PULL-KT-78*

Qty	P/N	Galv	SS	Location
1	MC1260417-6 or 7			Park Brake Cable & Tube
1	MC1260505-317 or 417			Park Brake
1	MC1260078-11 or 111			Aileron Yoke LH
1	MC1260078-12 or 112			Aileron Yoke RH
1	MC1260078-10 or 110			Aileron Yoke Carry Thru
2	MC1260078-14 or 114			Aileron Yoke Direct
2	MC1260505-321 or 421			Aileron Direct Bellcrank
1	MC1260505-323 or 423			Aileron Return LH
1	MC1260505-322 or 422			Aileron Return RH
1	MC1260475-12 or 112			Elevator Up
1	MC1260475-13 or 113			Elevator Down
1	MCS2295A25-111			Chain Elevator Trim Fwd Up
1	MCS2295P25-159			Chain Elevator Trim Fwd Low
1	MC1260475-1 or 101			Elevator Trim Forward LH
1	MC1260475-2 or 102			Elevator Trim Forward RH
1	MCS2295P25-59			Chain Elevator Trim Actuator
1	MC1260505-325 or 425			Elevator Trim Aft LH
1	MC1260505-326 or 426			Elevator Trim Aft RH
1	MC1260505-73 or 173			Flap Down LH Trnbkl to Act
1	MC1260505-71 or 171			Flap Down RH Trnbkl to Act
2	MC1260505-48 or 148			Flap Up Bellcrank to Trnbkl
2	MC1260505-47 or 147			Flap Down LH/RH Bellcrank to Turnbuckle
1	MC1260505-70 or 170			Flap Up LH Turnbuckle to Act
1	MC1260505-72 or 172			Flap Up RH Turnbuckle to Act
1	MC1260475-5 or 105			Rudder Forward LH
1	MC1260475-6 or 106			Rudder Forward RH
1	MC1260505-329 or 429			Rudder Aft LH
1	MC1260505-330 or 430			Rudder Aft RH
6	MCS2294-25			Chain Connecting Link

P210N[1] 1978-1980[1]
S/N P21000001 thru P21000553
Complete Cable Kit P/N CCKTP210-01G (Galvanized)
Complete Cable Kit P/N CCKTP210-01S (Stainless Steel)
Complete Pulley Kit P/N PULL-KT-81*

Qty	P/N	Galv	SS	Location
1	MC1260505-97 or 197			Park Brake
1	MC1260078-11 or 111			Aileron Yoke LH
1	MC1260078-12 or 112			Aileron Yoke RH
1	MC1260078-10 or 110			Aileron Yoke Carry Thru
2	MC1260208-1[2]			Aileron/Rudder Int Lower
1	MC1260505-174[2]			Aileron/Rudder Int Upper
1	MC1260505-187[2]			Ail/Rud Int Upper w/Tube
2	MC1260078-13 or 113			Aileron Direct Yoke
2	MC1260505-40 or 140			Aileron Direct Bellcrank
1	MC1260505-314 or 414			Aileron Return LH
1	MC1260505-315 or 415			Aileron Return RH
1	MC1260475-12 or 112			Elevator Up
1	MC1260475-13 or 113			Elevator Down
1	MC1260505-96 or 196			Elevator Down Spring
1	MCS2295A25-111			Chain Elevator Trim Fwd Up
1	MCS2295P25-159			Chain Elevator Trim Fwd Low
1	MC1260475-1 or 101			Elevator Trim Forward LH
1	MC1260475-2 or 102			Elevator Trim Forward RH
1	MCS2295P25-55			Chain Elevator Trim Actuator
1	MC1260475-9 or 109			Elevator Trim Aft LH
1	MC1260475-10 or 110			Elevator Trim Aft RH
1	MC1260505-73 or 173			Flap Down LH Trnbkl to Act
1	MC1260505-71 or 171			Flap Down RH Trnbkl to Act
2	MC1260505-48 or 148			Flap Up Bellcrank to Trnbkl
2	MC1260505-47 or 147			Flap Down LH/RH Bellcrank to Turnbuckle
1	MC1260505-70 or 170			Flap Up LH Turnbuckle to Act
1	MC1260505-72 or 172			Flap Up RH Turnbuckle to Act
1	MC1260475-5 or 105			Rudder Forward LH
1	MC1260475-6 or 106			Rudder Forward RH
1	MC1260505-13 or 113			Rudder Aft LH
1	MC1260505-12 or 112			Rudder Aft RH
6	MCS2294-25			Chain Connecting Link

P210N[1] 1980[1]-1981[1]
S/N P21000554 thru P21000622
Complete Cable Kit P/N CCKTP210-02G (Galvanized)
Complete Cable Kit P/N CCKTP210-02S (Stainless Steel)
Complete Pulley Kit P/N PULL-KT-81*

Qty	P/N	Galv	SS	Location
1	MC1260505-317 or 417			Park Brake
1	MC1260078-11 or 111			Aileron Yoke LH
1	MC1260078-12 or 112			Aileron Yoke RH
1	MC1260078-10 or 110			Aileron Yoke Carry Thru
2	MC1260208-1[2]			Aileron/Rudder Int Lower
1	MC1260505-174[2]			Aileron/Rudder Int Upper
1	MC1260505-187[2]			Ail/Rud Int Upper w/Tube
2	MC1260078-13 or 113			Aileron Direct Yoke
2	MC1260505-40 or 140			Aileron Direct Bellcrank
1	MC1260505-314 or 414			Aileron Return LH
1	MC1260505-315 or 415			Aileron Return RH
1	MC1260475-12 or 112			Elevator Up
1	MC1260475-13 or 113			Elevator Down
1	MC1260505-96 or 196			Elevator Down Spring
1	MCS2295A25-111			Chain Elevator Trim Fwd Up
1	MCS2295P25-159			Chain Elevator Trim Fwd Low
1	MC1260475-1 or 101			Elevator Trim Forward LH
1	MC1260475-2 or 102			Elevator Trim Forward RH
1	MCS2295P25-55			Chain Elevator Trim Actuator
1	MC1260475-9 or 109			Elevator Trim Aft LH
1	MC1260475-10 or 110			Elevator Trim Aft RH
1	MC1260505-73 or 173			Flap Down LH Trnbkl to Act
1	MC1260505-71 or 171			Flap Down RH Trnbkl to Act
2	MC1260505-48 or 148			Flap Up Bellcrank to Trnbkl
2	MC1260505-47 or 147			Flap Down LH/RH Bellcrank to Turnbuckle
1	MC1260505-70 or 170			Flap Up LH Turnbuckle to Act
1	MC1260505-72 or 172			Flap Up RH Turnbuckle to Act
1	MC1260475-5 or 105			Rudder Forward LH
1	MC1260475-6 or 106			Rudder Forward RH
1	MC1260505-13 or 113			Rudder Aft LH
1	MC1260505-12 or 112			Rudder Aft RH
6	MCS2294-25			Chain Connecting Link

P210N[1] 1981[1]-1982[1]
S/N P21000623 thru P21000797
Complete Cable Kit P/N CCKTP210-03G (Galvanized)
Complete Cable Kit P/N CCKTP210-03S (Stainless Steel)
Complete Pulley Kit P/N PULL-KT-81*

Qty	P/N	Galv	SS	Location
1	MC1260505-317 or 417			Park Brake
1	MC1260078-11 or 111			Aileron Yoke LH
1	MC1260078-12 or 112			Aileron Yoke RH
1	MC1260078-10 or 110			Aileron Yoke Carry Thru
2	MC1260208-1[2]			Aileron/Rudder Int Lower
1	MC1260505-174[2]			Aileron/Rudder Int Upper
1	MC1260505-187[2]			Ail/Rud Int Upper w/Tube
2	MC1260078-13 or 113			Aileron Direct Yoke
2	MC1260505-40 or 140			Aileron Direct Bellcrank
1	MC1260505-314 or 414			Aileron Return LH
1	MC1260505-315 or 415			Aileron Return RH

Kit continues in next column

Continued from previous column

Qty	P/N	Galv	SS	Location
1	MC1260475-12 or 112			Elevator Up
1	MC1260475-13 or 113			Elevator Down
1	MC1260505-96 or 196			Elevator Down Spring
1	MCS2295A25-111			Chain Elevator Trim Fwd Up
1	MCS2295P25-159			Chain Elevator Trim Fwd Low
1	MC1260475-1 or 101			Elevator Trim Forward LH
1	MC1260475-2 or 102			Elevator Trim Forward RH
1	MCS2295P25-55			Chain Elevator Trim Actuator
1	MC1260475-9 or 109			Elevator Trim Aft LH
1	MC1260475-10 or 110			Elevator Trim Aft RH
1	MC1260505-73 or 173			Flap Down LH Trnbkl to Act
1	MC1260505-71 or 171			Flap Down RH Trnbkl to Act
2	MC1260505-48 or 148			Flp Up Bellcrank to Trnbkl
2	MC1260505-47 or 147			Flap Down LH/RH Bellcrank to Turnbuckle
1	MC1260505-70 or 170			Flap Up LH Turnbuckle to Act
1	MC1260505-72 or 172			Flap Up RH Turnbuckle to Act
1	MC1260475-5 or 105			Rudder Forward LH
1	MC1260475-6 or 106			Rudder Forward RH
1	MC1260505-319 or 419			Rudder Aft LH
1	MC1260505-12 or 112			Rudder Aft RH
6	MCS2294-25			Chain Connecting Link

P210N[1] 1982[1]-1986
S/N P21000798 thru P21000834
Complete Cable Kit P/N CCKTP210-04G (Galvanized)
Complete Cable Kit P/N CCKTP210-04S (Stainless Steel)
Complete Pulley Kit P/N PULL-KT-81*

Qty	P/N	Galv	SS	Location
1	MC1260505-317 or 417			Park Brake
1	MC1260078-11 or 111			Aileron Yoke LH
1	MC1260078-12 or 112			Aileron Yoke RH
1	MC1260078-10 or 110			Aileron Yoke Carry Thru
2	MC1260208-1[2]			Aileron/Rudder Int Lower
1	MC1260505-174[2]			Aileron/Rudder Int Upper
1	MC1260505-187[2]			Ail/Rud Int Upper w/Tube
2	MC1260078-14 or 114			Aileron Direct Yoke
2	MC1260505-321 or 421			Aileron Direct Bellcrank
1	MC1260505-314 or 414			Aileron Return LH
1	MC1260505-315 or 415			Aileron Return RH
1	MC1260475-12 or 112			Elevator Up
1	MC1260475-13 or 113			Elevator Down
1	MC1260505-96 or 196			Elevator Down Spring
1	MCS2295A25-111			Chain Elevator Trim Fwd Up
1	MCS2295P25-159			Chain Elevator Trim Fwd Low
1	MC1260475-1 or 101			Elevator Trim Forward LH
1	MC1260475-2 or 102			Elevator Trim Forward RH
1	MCS2295P25-55			Chain Elevator Trim Actuator
1	MC1260475-9 or 109			Elevator Trim Aft LH
1	MC1260475-10 or 110			Elevator Trim Aft RH
1	MC1260505-73 or 173			Flap Down LH Trnbkl to Act
1	MC1260505-71 or 171			Flap Down RH Trnbkl to Act
2	MC1260505-48 or 148			Flap Up Bellcrank to Trnbkl
2	MC1260505-47 or 147			Flap Down LH/RH Bellcrank to Turnbuckle
1	MC1260505-70 or 170			Flap Up LH Turnbuckle to Act
1	MC1260505-72 or 172			Flap Up RH Turnbuckle to Act
1	MC1260475-5 or 105			Rudder Forward LH
1	MC1260475-6 or 106			Rudder Forward RH
1	MC1260505-319 or 419			Rudder Aft LH
1	MC1260505-12 or 112			Rudder Aft RH
6	MCS2294-25			Chain Connecting Link

P210R 1985-1986
S/N P21000835 thru P21000874
Complete Cable Kit P/N CCKTP210-05G (Galvanized)
Complete Cable Kit P/N CCKTP210-05S (Stainless Steel)
Complete Pulley Kit P/N PULL-KT-82*

Qty	P/N	Galv	SS	Location
1	MC1260505-317 or 417			Park Brake
1	MC1260078-11 or 111			Aileron Yoke LH
1	MC1260078-12 or 112			Aileron Yoke RH
1	MC1260078-10 or 110			Aileron Yoke Carry Thru
2	MC1260208-1[2]			Aileron/Rudder Int Lower
1	MC1260505-174[2]			Aileron/Rudder Int Upper
1	MC1260505-187[2]			Ail/Rud Int Upper w/Tube
2	MC1260078-14 or 114			Aileron Direct Yoke
2	MC1260505-321 or 421			Aileron Direct Bellcrank
1	MC1260505-323 or 423			Aileron Return LH
1	MC1260505-322 or 422			Aileron Return RH
1	MC1260475-12 or 112			Elevator Up
1	MC1260475-13 or 113			Elevator Down
1	MCS2295A25-111			Chain Elevator Trim Fwd Up
1	MCS2295P25-159			Chain Elevator Trim Fwd Low
1	MC1260475-1 or 101			Elevator Trim Forward LH
1	MC1260475-2 or 102			Elevator Trim Forward RH
1	MCS2295P25-59			Chain Elevator Trim Actuator
1	MC1260505-325 or 425			Elevator Trim Aft LH

Kit continues on next page

*** See pages 107-108 for Pulley Kit Components**
[1] Partial model eligibility
[2] Included in both galvanized and stainless kits.

Continued from previous page

Qty	P/N	Galv	SS	Location
1	MC1260505-326 or 426			Elevator Trim Aft RH
1	MC1260505-73 or 173			Flap Down LH Trnbkl to Act
2	MC1260505-48 or 148			Flap Up Bellcrank to Trnbkl
2	MC1260505-47 or 147			Flap Down LH/RH Bellcrank to Turnbuckle
1	MC1260505-71 or 171			Flap Down RH Trnbkl to Act
1	MC1260505-70 or 170			Flap Up LH Turnbuckle to Act
1	MC1260505-72 or 172			Flap Up RH Turnbuckle to Act
1	MC1260475-5 or 105			Rudder Forward LH
1	MC1260475-6 or 106			Rudder Forward RH
1	MC1260505-329 or 429			Rudder Aft LH
1	MC1260505-330 or 430			Rudder Aft RH
6	MCS2294-25			Chain Connecting Link

* See pages 107-108 for Pulley Kit Components
1 Partial model eligibility
2 Included in both galvanized and stainless kits.

Stabilator Adjust Cables for Piper Aircraft

- Time tested 'long splice' method for strength and reliability
- Available in galvanized or stainless
- Custom lengths available for your antique projects

P/N MC42911
Self lubricating Fairlead

Model	S/N	P/N	Cable Comp.
J-3, PA-11	All	MC41671-2	Galvanized
PA-12	All	MC41671-5	Galvanized
PA-12	All	MC41671-6	Stainless
J-3, PA-11	All	MC41671-8	Stainless
PA-14	All	MC41671-9	Galvanized
PA-16, PA-20	All	MC41671-11	Galvanized
PA-14	All	MC41671-12	Galvanized
PA-18, PA-18A	1 thru 548	MC41671-13	Galvanized
PA-16	All	MC41671-14	Stainless
PA-18, PA-18A	All with Floats	MC41671-15	Stainless
PA-20, PA-22	All	MC41671-16	Galvanized
PA-18, PA-18A	549 and On	MC41671-17	Galvanized
PA-22	354 and On	MC41671-18	Stainless
PA-18, PA-18A	All with Floats	MC41671-19	Stainless

Cables for AG-CAT Aircraft

Model	Location	Part Number	Per A/C
Aileron Cables			
G-164	Upper Sector	MCA1860-101	2
G-164	Lower Sector	MCA1860-101	2
G164A	Upper Sector	MCA1860-401	2
G164A	Lower Sector	MCA1860-101	2
G164B	Upper Sector	MCA2860-7	2
G164B	Lower Sector	MCA2860-5	2
Rudder Cables			
G164, G164A	Left Hand	MCA1860-35	1
G164, G164A	Right Hand	MCA1860-36	1
G164B	Left & Right	MCA3860-3	2

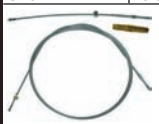

Subassemblies consisting of a long and short cable are available. Call for details.

How to Determine Flight Cable Composition

Using a magnet to determine if a cable is galvanized steel or stainless steel alloy can be unreliable as stainless steel can display magnetic properties which can make alloy discrimination difficult. The unreliability comes from variation in the amount of magnetic permeability found in the stainless steel cable and from strength differences in the magnets used. Stainless steel cables become magnetic in the process of cold working stainless steel wires into cable. The amount of magnetic permeability varies with the amount of cold working the cable was subject to. It is also possible cables in-service will become more magnetic over time as they work-harden through use.

A better test is to use an ohm meter to measure the resistance in a length of cable. Stainless steel has more electrical resistance than zinc or tin coated high carbon steel, which allows us to identify cable composition by the amount of resistance in a length of cable. This test is applicable to the most common aircraft cable diameters: 1/16 through 5/32 with 7x7 or 7x19 construction. To ensure accuracy in cable resistance measurements, use the following procedure:

- You will need access to at least 3 feet of cable.
- The ohm meter and leads must be in good condition.
- Electrical isolation of the cable from the aircraft is required for an accurate resistance measurement. The cable should be removed from the aircraft or at least one end of the cable disconnected from the aircraft. Ensure the cable is not touching anything conductive between the freed end and the area of the measurement.
- For non-auto ranging multimeters, set the resistance range to the lowest scale (typically 1x) and zero the meter.
- Measure the resistance of the cable across a span of at least 3 feet. Assure that the cable is clean and you are getting good contact between the cable and the ohm meter leads.
- Do not allow your fingers to touch the metallic probes of the ohm meter leads when measuring.
- Galvanized cable and tin coated cable will register less than 1 ohm resistance while stainless steel will indicate more than 1 ohm.
- If possible, check your meter on a length of cable where the alloy is known.

If the cable is to be returned to service, reinstall and rig the cable as per the aircraft manufacturer's service manual. Install all required safety devices.

Adjustable Elevator Neutral Rigging Tool for Cessna Aircraft

Save time, you'll always have the correct tool!
P/N TOOL126

Proper elevator rigging is necessary for full range of motion and maneuverability of the airplane. Many Cessna maintenance manuals require the fabrication of a tool to hold the yoke in the neutral position while the mechanic rigs the elevator control system. These tools utilize the holes for the control gust lock. At least 17 different sizes of rigging tools are required to cover the various Cessna aircraft. Now there is one tool to replace them all.

The McFarlane Elevator Neutral Rigging Tool is adjustable from 0.4" to 2.5" and universal in design, consisting of six different pin sizes to fit your application. This tool may also be used to properly rig other makes of aircraft with similar elevator neutral rigging requirements.

Features and Benefits

- Replaces 17 costly tools
- Quick setup and adjustment
- Simple to use instructions
- Includes compact storage box
- Replacement parts available separately
- Stainless steel components

Note:
Refer to your Cessna maintenance manual to determine if your model requires the use of the elevator neutral rigging tool and follow its guidelines for proper pin selection and adjustment guidelines.

Fits most Cessna 150 thru 425 aircraft!

Elevator Neutral Rigging Tool Replacement Parts

Part Number	Description
6409	.050"/1.3mm Hex Wrench
6870	Square Nut
6868-4	Pin, .188, Short
6868-3	Pin, .188, Long
6868-1	Pin, .209, Short
6868-2	Pin, .209, Long
6869-1	Pin, .250, Short
6869-2	Pin, .250, Long

PA28-140
S/N 28-20002 thru 28-20656
Complete Kit P/N PCKT140-01
Stabilator Kit P/N PCKT-STAB-01 [1]

Qty	Part Number	Location
1	MC62701-016	Stabilator Trim Indicator Aft
1	MC62701-032	Stabilator Trim
1	MC62701-010 [1]	Stabilator Forward LH
1	MC62701-011 [1]	Stabilator Forward RH
1	MC62701-012 [1]	Stabilator Aft Bottom
1	MC62701-013 [1]	Stabilator Aft Top
2	MC62701-006	Rudder Forward LH and RH
2	MC62701-008	Rudder Aft LH and RH
2	MC62701-002	Aileron Forward LH and RH
2	MC62701-003	Aileron Wing LH and RH
1	MC62701-004	Aileron Balance LH
1	MC62701-005	Aileron Balance RH
1	MC62701-014	Flap

PA28-140
S/N 28-20002 thru 28-20656
with Kit #756-896 or Kit #756-930 Installed,
28-20657 thru 28-26956, 28-7125001 thru 28-7225612 with
Kit #756-896 or Kit #756-930 Installed
Complete Kit P/N PCKT140-02 (Manual Trim)
Complete Kit P/N PCKT140-05 (Electric Trim)
Stabilator Kit P/N PCKT-STAB-01 [1]

Qty	Part Number	Location
1	MC62701-016	Stabilator Trim Indicator Aft
1	MC62701-045 [2]	Stabilator Trim Forward (Manual)
1	MC62701-047	Stabilator Trim Aft
1	MC62701-044 [3]	Stabilator Trim Forward (Electric)
1	MC62701-010 [1]	Stabilator Forward LH
1	MC62701-011 [1]	Stabilator Forward RH
1	MC62701-012 [1]	Stabilator Aft Bottom
1	MC62701-013 [1]	Stabilator Aft Top
2	MC62701-006	Rudder Forward LH and RH
2	MC62701-008	Rudder Aft LH and RH
2	MC62701-002	Aileron Forward LH and RH
2	MC62701-003	Aileron Wing LH and RH
1	MC62701-004	Aileron Balance LH
1	MC62701-005	Aileron Balance RH
1	MC62701-014	Flap

PA28-140
S/N 28-7325001 thru 28-7625234,
28-7725001 thru 28-7725290
Complete Kit P/N PCKT140-03 (Manual Trim)
Complete Kit P/N PCKT140-04 (Electric Trim)
Stabilator Kit P/N PCKT-STAB-01 [1]

Qty	Part Number	Location
2	MC62701-002	Aileron Forward LH and RH
2	MC62701-003	Aileron Wing LH and RH
1	MC62701-004	Aileron Balance LH
1	MC62701-005	Aileron Balance RH
2	MC62701-006	Rudder Forward LH and RH
2	MC62701-008	Rudder Aft LH and RH
1	MC62701-010 [1]	Stabilator Forward LH
1	MC62701-011 [1]	Stabilator Forward RH
1	MC62701-012 [1]	Stabilator Aft Bottom
1	MC62701-013 [1]	Stabilator Aft Top
1	MC62701-047	Stabilator Trim Aft
1	MC62701-016	Stabilator Trim Indicator Aft
2	MC62701-056 [4]	Stab Trim Fwd LH and RH (Manual)
1	MC62701-057 [3]	Stab Trim Fwd LH (Electric)
1	MC62701-014	Flap

PA28-150
S/N 28-1 thru 28-1410
Complete Kit P/N PCKT150-01
Stabilator Kit P/N PCKT-STAB-01 [1]

Qty	Part Number	Location
2	MC62701-002	Aileron Forward LH and RH
2	MC62701-003	Aileron Wing LH and RH
1	MC62701-004	Aileron Balance LH
1	MC62701-005	Aileron Balance RH
2	MC62701-006	Rudder Forward LH and RH
2	MC62701-008	Rudder Aft LH and RH
1	MC62701-010 [1]	Stabilator Forward LH
1	MC62701-011 [1]	Stabilator Forward RH
1	MC62701-012 [1]	Stabilator Aft Bottom
1	MC62701-013 [1]	Stabilator Aft Top
1	MC62701-016	Stabilator Trim Indicator Aft
1	MC62701-015	Stabilator Trim Forward
1	MC62701-014	Flap

PA28-150
S/N 28-1 thru 28-2171
With Kit # 756-896 or Kit #756-930 Installed
Complete Kit P/N PCKT150-02
Stabilator Kit P/N PCKT-STAB-01 [1]

Qty	Part Number	Location
2	MC62701-002	Aileron Forward LH and RH
2	MC62701-003	Aileron Wing LH and RH
1	MC62701-004	Aileron Balance LH
1	MC62701-005	Aileron Balance RH
2	MC62701-006	Rudder Forward LH and RH
2	MC62701-008	Rudder Aft LH and RH

Kit continues in next column

Continued from previous column

Qty	Part Number	Location
1	MC62701-010 [1]	Stabilator Forward LH
1	MC62701-011 [1]	Stabilator Forward RH
1	MC62701-012 [1]	Stabilator Aft Bottom
1	MC62701-013 [1]	Stabilator Aft Top
1	MC62701-016	Stabilator Trim Indicator Aft
1	MC62701-045	Stabilator Trim Forward
1	MC62701-047	Stabilator Trim Aft
1	MC62701-014	Flap

PA28-150
S/N 28-1411 thru 28-2171
Complete Kit P/N PCKT150-03
Stabilator Kit P/N PCKT-STAB-01 [1]

Qty	Part Number	Location
2	MC62701-002	Aileron Forward LH and RH
2	MC62701-003	Aileron Wing LH and RH
1	MC62701-004	Aileron Balance LH
1	MC62701-005	Aileron Balance RH
2	MC62701-006	Rudder Forward LH and RH
2	MC62701-008	Rudder Aft LH and RH
1	MC62701-010 [1]	Stabilator Forward LH
1	MC62701-011 [1]	Stabilator Forward RH
1	MC62701-012 [1]	Stabilator Aft Bottom
1	MC62701-013 [1]	Stabilator Aft Top
1	MC62701-014	Flap
1	MC62701-016	Stabilator Trim Indicator Aft
1	MC62701-032	Stabilator Trim

PA28-150
S/N 28-2172 thru 28-4377
Complete Kit P/N PCKT150-04 (Manual Trim)
Complete Kit P/N PCKT150-05 (Electric Trim)
Stabilator Kit P/N PCKT-STAB-01 [1]

Qty	Part Number	Location
2	MC62701-002	Aileron Forward LH and RH
2	MC62701-003	Aileron Wing LH and RH
1	MC62701-004	Aileron Balance LH
1	MC62701-005	Aileron Balance RH
2	MC62701-006	Rudder Forward LH and RH
2	MC62701-008	Rudder Aft LH and RH
1	MC62701-010 [1]	Stabilator Forward LH
1	MC62701-011 [1]	Stabilator Forward RH
1	MC62701-012 [1]	Stabilator Aft Bottom
1	MC62701-013 [1]	Stabilator Aft Top
1	MC62701-016	Stabilator Trim Indicator Aft
1	MC62701-045 [2]	Stab Trim Forward (Manual)
1	MC62701-047	Stabilator Trim Aft
1	MC62701-044 [3]	Stab Trim Forward (Electric)
1	MC62701-014	Flap

PA28-151
S/N 28-7415001 thru 28-7715314
Complete Kit P/N PCKT151-01 (Manual Trim)
Complete Kit P/N PCKT151-02 (Electric Trim)
Stabilator Kit P/N PCKT-STAB-03 [1]

Qty	Part Number	Location
2	MC62701-099	Aileron Forward LH and RH
2	MC62701-122	Aileron Wing LH and RH
1	MC62701-123	Aileron Balance LH
1	MC62701-124	Aileron Balance RH
2	MC62701-100	Rudder Forward LH and RH
2	MC62701-008	Rudder Aft LH and RH
1	MC62701-113 [1]	Stabilator Forward LH
1	MC62701-114 [1]	Stabilator Forward RH
1	MC62701-012 [1]	Stabilator Aft Bottom
1	MC62701-013 [1]	Stabilator Aft Top
1	MC62701-101	Flap
1	MC62701-047	Stabilator Trim Aft
2	MC62701-104 [4]	Stab Trim Fwd LH and RH (Manual)
1	MC62701-111 [3]	Stab Trim Forward LH (Electric)

PA28-160
S/N 28-1 thru 28-1410
Complete Kit P/N PCKT160-01
Stabilator Kit P/N PCKT-STAB-01 [1]

Qty	Part Number	Location
2	MC62701-002	Aileron Forward LH and RH
2	MC62701-003	Aileron Wing LH and RH
1	MC62701-004	Aileron Balance LH
1	MC62701-005	Aileron Balance RH
2	MC62701-006	Rudder Forward LH and RH
2	MC62701-008	Rudder Aft LH and RH
1	MC62701-010 [1]	Stabilator Forward LH
1	MC62701-011 [1]	Stabilator Forward RH
1	MC62701-012 [1]	Stabilator Aft Bottom
1	MC62701-013 [1]	Stabilator Aft Top
1	MC62701-016	Stabilator Trim Indicator Aft
1	MC62701-015	Stabilator Trim
1	MC62701-014	Flap

PA28-160
S/N 28-1 thru 28-2171
With Kit # 756-896 or Kit #756-930 Installed
Complete Kit P/N PCKT160-02
Stabilator Kit P/N PCKT-STAB-01 [1]

Qty	Part Number	Location
2	MC62701-002	Aileron Forward LH and RH
2	MC62701-003	Aileron Wing LH and RH
1	MC62701-004	Aileron Balance LH
1	MC62701-005	Aileron Balance RH
2	MC62701-006	Rudder Forward LH and RH
2	MC62701-008	Rudder Aft LH and RH
1	MC62701-010 [1]	Stabilator Forward LH
1	MC62701-011 [1]	Stabilator Forward RH
1	MC62701-012 [1]	Stabilator Aft Bottom
1	MC62701-013 [1]	Stabilator Aft Top
1	MC62701-016	Stabilator Trim Indicator Aft
1	MC62701-045	Stabilator Trim Forward
1	MC62701-047	Stabilator Trim Aft
1	MC62701-014	Flap

PA28-160
S/N 28-1411 thru 28-2171
Complete Kit P/N PCKT160-03
Stabilator Kit P/N PCKT-STAB-01 [1]

Qty	Part Number	Location
2	MC62701-002	Aileron Forward LH and RH
2	MC62701-003	Aileron Wing LH and RH
1	MC62701-004	Aileron Balance LH
1	MC62701-005	Aileron Balance RH
2	MC62701-006	Rudder Forward LH and RH
2	MC62701-008	Rudder Aft LH and RH
1	MC62701-010 [1]	Stabilator Forward LH
1	MC62701-011 [1]	Stabilator Forward RH
1	MC62701-012 [1]	Stabilator Aft Bottom
1	MC62701-013 [1]	Stabilator Aft Top
1	MC62701-014	Flap
1	MC62701-016	Stabilator Trim Indicator Aft
1	MC62701-032	Stabilator Trim

PA28-160
S/N 28-2172 thru 28-4377
Complete Kit P/N PKCT160-04 (Manual Trim)
Complete Kit P/N PKCT160-05 (Electric Trim)
Stabilator Kit P/N PCKT-STAB-01 [1]

Qty	Part Number	Location
2	MC62701-002	Aileron Forward LH and RH
2	MC62701-003	Aileron Wing LH and RH
1	MC62701-004	Aileron Balance LH
1	MC62701-005	Aileron Balance RH
2	MC62701-006	Rudder Forward LH and RH
2	MC62701-008	Rudder Aft LH and RH
1	MC62701-010 [1]	Stabilator Forward LH
1	MC62701-011 [1]	Stabilator Forward RH
1	MC62701-012 [1]	Stabilator Aft Bottom
1	MC62701-013 [1]	Stabilator Aft Top
1	MC62701-016	Stabilator Trim Indicator Aft
1	MC62701-045 [2]	Stab Trim Forward (Manual)
1	MC62701-047	Stabilator Trim Aft
1	MC62701-044 [3]	Stab Trim Forward (Electric)
1	MC62701-014	Flap

PA28-161
S/N 28-7716002 thru 28-8616057,
2816001 thru 2816065, 2816067 thru 2816119,
2841001 thru 2841365, 2842001 thru 2842999
Complete Kit P/N PCKT161-01 (Manual Trim)
Complete Kit P/N PCKT161-02 (Electric Trim)
Stabilator Kit P/N PCKT-STAB-03 [1]

Qty	Part Number	Location
2	MC62701-099	Aileron Forward LH and RH
2	MC62701-122	Aileron Wing LH and RH
1	MC62701-123	Aileron Balance LH
1	MC62701-124	Aileron Balance RH
2	MC62701-100	Rudder Forward LH and RH
2	MC62701-008	Rudder Aft LH and RH
1	MC62701-113 [1]	Stabilator Forward LH
1	MC62701-114 [1]	Stabilator Forward RH
1	MC62701-012 [1]	Stabilator Aft Bottom
1	MC62701-013 [1]	Stabilator Aft Top
1	MC62701-101	Flap
1	MC62701-047	Stabilator Trim Aft
2	MC62701-104 [4]	Stab Trim Fwd LH and RH (Manual)
1	MC62701-111 [3]	Stabilator Trim Forward LH (Electric)

[1] Stabilator kits to assist with Piper AD2013-02-13 include cables designated with [1] plus 2 each MS21251-B5S Barrels and 10 each MS21256-1 Locking Clips.
[2] Included in kits for manual trim aircraft only.
[3] Included in kits for electric trim aircraft only.
[4] Kits for electric trim aircraft include only one of this part number.

Flight Control System
Flight Control Cables - Piper

PA28-180
S/N 28-725 thru 28-1410
Complete Kit P/N PCKT180-01
Stabilator Kit P/N PCKT-STAB-01 [1]

Qty	Part Number	Location
2	MC62701-002	Aileron Forward LH and RH
2	MC62701-003	Aileron Wing LH and RH
1	MC62701-004	Aileron Balance LH
1	MC62701-005	Aileron Balance RH
2	MC62701-006	Rudder Forward LH and RH
2	MC62701-008	Rudder Aft LH and RH
1	MC62701-010 [1]	Stabilator Forward LH
1	MC62701-011 [1]	Stabilator Forward RH
1	MC62701-012 [1]	Stabilator Aft Bottom
1	MC62701-013 [1]	Stabilator Aft Top
1	MC62701-016	Stabilator Trim Indicator Aft
1	MC62701-015	Stabilator Trim
1	MC62701-014	Flap

PA28-180
S/N 28-725 thru 28-2171
With Kit # 756-896 or Kit #756-930 Installed
Complete Kit P/N PCKT180-02
Stabilator Kit P/N PCKT-STAB-01 [1]

Qty	Part Number	Location
2	MC62701-002	Aileron Forward LH and RH
2	MC62701-003	Aileron Wing LH and RH
1	MC62701-004	Aileron Balance LH
1	MC62701-005	Aileron Balance RH
2	MC62701-006	Rudder Forward LH and RH
2	MC62701-008	Rudder Aft LH and RH
1	MC62701-010 [1]	Stabilator Forward LH
1	MC62701-011 [1]	Stabilator Forward RH
1	MC62701-012 [1]	Stabilator Aft Bottom
1	MC62701-013 [1]	Stabilator Aft Top
1	MC62701-016	Stabilator Trim Indicator Aft
1	MC62701-045	Stabilator Trim Forward
1	MC62701-047	Stabilator Trim Aft
1	MC62701-014	Flap

PA28-180
S/N 28-1411 thru 28-2171
Complete Kit P/N PCKT180-03
Stabilator Kit P/N PCKT-STAB-01 [1]

Qty	Part Number	Location
2	MC62701-002	Aileron Forward LH and RH
2	MC62701-003	Aileron Wing LH and RH
1	MC62701-004	Aileron Balance LH
1	MC62701-005	Aileron Balance RH
2	MC62701-006	Rudder Forward LH and RH
2	MC62701-008	Rudder Aft LH and RH
1	MC62701-010 [1]	Stabilator Forward LH
1	MC62701-011 [1]	Stabilator Forward RH
1	MC62701-012 [1]	Stabilator Aft Bottom
1	MC62701-013 [1]	Stabilator Aft Top
1	MC62701-014	Flap
1	MC62701-016	Stabilator Trim Indicator Aft
1	MC62701-032	Stabilator Trim

PA28-180
S/N 28-2172 thru 28-4377
Complete Kit P/N PCKT180-04 (Manual Trim)
Complete Kit P/N PCKT180-09 (Electric Trim)
Stabilator Kit P/N PCKT-STAB-01 [1]

Qty	Part Number	Location
2	MC62701-002	Aileron Forward LH and RH
2	MC62701-003	Aileron Wing LH and RH
1	MC62701-004	Aileron Balance LH
1	MC62701-005	Aileron Balance RH
2	MC62701-006	Rudder Forward LH and RH
2	MC62701-008	Rudder Aft LH and RH
1	MC62701-010 [1]	Stabilator Forward LH
1	MC62701-011 [1]	Stabilator Forward RH
1	MC62701-012 [1]	Stabilator Aft Bottom
1	MC62701-013 [1]	Stabilator Aft Top
1	MC62701-016	Stabilator Indicator Aft
1	MC62701-045 [2]	Stabilator Trim Forward (Manual)
1	MC62701-047	Stabilator Trim Aft
1	MC62701-044 [3]	Stabilator Trim Forward (Electric)
1	MC62701-014	Flap

PA28-180
S/N 28-4378 thru 28-5869,
28-7105001 thru 28-7205328
Complete Kit P/N PCKT180-05 (Manual Trim)
Complete Kit P/N PCKT180-06 (Electric Trim)
Stabilator Kit P/N PCKT-STAB-01 [1]

Qty	Part Number	Location
2	MC62701-002	Aileron Forward LH and RH
2	MC62701-003	Aileron Wing LH and RH
1	MC62701-004	Aileron Balance LH
1	MC62701-005	Aileron Balance RH
2	MC62701-006	Rudder Forward LH and RH
2	MC62701-008	Rudder Aft LH and RH
1	MC62701-010 [1]	Stabilator Forward LH
1	MC62701-011 [1]	Stabilator Forward RH
1	MC62701-012 [1]	Stabilator Aft Bottom

Kit continues in next column

Continued from previous column

Qty	Part Number	Location
1	MC62701-013 [1]	Stabilator Aft Top
1	MC62701-047	Stabilator Trim Aft
2	MC62701-056 [4]	Stab Trim Fwd LH and RH (Manual)
1	MC62701-057 [3]	Stabilator Trim Forward LH (Electric)
1	MC62701-014	Flap

PA28-180
S/N 28-7305001 thru 28-7505261
Complete Kit P/N PCKT180-07 (Manual Trim)
Complete Kit P/N PCKT180-08 (Electric Trim)
Stabilator Kit P/N PCKT-STAB-03 [1]

Qty	Part Number	Location
2	MC62701-099	Aileron Forward LH and RH
2	MC62701-003	Aileron Wing LH and RH
1	MC62701-004	Aileron Balance LH
1	MC62701-005	Aileron Balance RH
2	MC62701-100	Rudder Forward LH and RH
2	MC62701-008	Rudder Aft LH and RH
1	MC62701-113 [1]	Stabilator Forward LH
1	MC62701-114 [1]	Stabilator Forward RH
1	MC62701-012 [1]	Stabilator Aft Bottom
1	MC62701-013 [1]	Stabilator Aft Top
1	MC62701-047	Stabilator Trim Aft
2	MC62701-104 [4]	Stab Trim Fwd LH and RH (Manual)
1	MC62701-111 [3]	Stabilator Trim Forward LH (Electric)
1	MC62701-101	Flap

PA28-181
S/N 28-7690001 thru 28-8690062,
2843001 thru 2843999, 2890001 thru 2890231 Complete Kit P/N PCKT181-01 (Manual Trim)
Complete Kit P/N PCKT181-02 (Electric Trim)
Stabilator Kit P/N PCKT-STAB-03 [1]

Qty	Part Number	Location
2	MC62701-099	Aileron Forward LH and RH
2	MC62701-122	Aileron Wing LH and RH
1	MC62701-123	Aileron Balance LH
1	MC62701-124	Aileron Balance RH
2	MC62701-100	Rudder Forward LH and RH
2	MC62701-008	Rudder Aft LH and RH
1	MC62701-113 [1]	Stabilator Forward LH
1	MC62701-114 [1]	Stabilator Forward RH
1	MC62701-012 [1]	Stabilator Aft Bottom
1	MC62701-013 [1]	Stabilator Aft Top
1	MC62701-101	Flap
1	MC62701-047	Stabilator Trim Aft
2	MC62701-104 [4]	Stab Trim Fwd LH and RH (Manual)
1	MC62701-111 [3]	Stabilator Trim Forward LH (Electric)

PA28-235
S/N 28-10003 thru 28-10605
Complete Kit P/N PCKT235-01
Stabilator Kit P/N PCKT-STAB-01 [1]

Qty	Part Number	Location
2	MC62701-002	Aileron Forward LH and RH
2	MC62701-003	Aileron Wing LH and RH
1	MC62701-004	Aileron Balance LH
1	MC62701-005	Aileron Balance RH
2	MC62701-006	Rudder Forward LH and RH
2	MC62701-008	Rudder Aft LH and RH
1	MC62701-010 [1]	Stabilator Forward LH
1	MC62701-011 [1]	Stabilator Forward RH
1	MC62701-012 [1]	Stabilator Aft Bottom
1	MC62701-013 [1]	Stabilator Aft Top
1	MC62701-016	Stabilator Indicator Aft
1	MC62701-032	Stabilator Trim
1	MC62701-014	Flap

PA28-235
S/N 28-10003 thru 28-10605
with kit 756-896 or 756-930 installed
Complete Kit P/N PCKT235-02
Stabilator Kit P/N PCKT-STAB-01 [1]

Qty	Part Number	Location
2	MC62701-002	Aileron Forward LH and RH
2	MC62701-003	Aileron Wing LH and RH
1	MC62701-004	Aileron Balance LH
1	MC62701-005	Aileron Balance RH
2	MC62701-006	Rudder Forward LH and RH
2	MC62701-008	Rudder Aft LH and RH
1	MC62701-010 [1]	Stabilator Forward LH
1	MC62701-011 [1]	Stabilator Forward RH
1	MC62701-012 [1]	Stabilator Aft Bottom
1	MC62701-013 [1]	Stabilator Aft Top
1	MC62701-016	Stabilator Indicator Aft
1	MC62701-045	Stabilator Trim Forward (Manual)
1	MC62701-047	Stabilator Trim Aft
1	MC62701-014	Flap

PA28-235
S/N 28-10606 thru 28-10719
Complete Kit P/N PCKT235-03 (Manual Trim)
Complete Kit P/N PCKT235-08 (Electric Trim)
Stabilator Kit P/N PCKT-STAB-01 [1]

Qty	Part Number	Location
2	MC62701-002	Aileron Forward LH and RH
2	MC62701-003	Aileron Wing LH and RH
1	MC62701-004	Aileron Balance LH
1	MC62701-005	Aileron Balance RH
2	MC62701-006	Rudder Forward LH and RH
2	MC62701-008	Rudder Aft LH and RH
1	MC62701-010 [1]	Stabilator Forward LH
1	MC62701-011 [1]	Stabilator Forward RH
1	MC62701-012 [1]	Stabilator Aft Bottom
1	MC62701-013 [1]	Stabilator Aft Top
1	MC62701-016	Stabilator Indicator Aft
1	MC62701-045 [2]	Stabilator Trim Forward (Manual)
1	MC62701-047	Stabilator Trim Aft
1	MC62701-044 [3]	Stabilator Trim Forward (Electric)
1	MC62701-014	Flap

PA28-235
S/N 28-10720 thru 28-11393
28-7110001 thru 28-7210033
Complete Kit P/N PCKT235-04 (Manual Trim)
Complete Kit P/N PCKT235-05 (Electric Trim)
Stabilator Kit P/N PCKT-STAB-01 [1]

Qty	Part Number	Location
2	MC62701-002	Aileron Forward LH and RH
2	MC62701-003	Aileron Wing LH and RH
1	MC62701-004	Aileron Balance LH
1	MC62701-005	Aileron Balance RH
2	MC62701-006	Rudder Forward LH and RH
2	MC62701-008	Rudder Aft LH and RH
1	MC62701-010 [1]	Stabilator Forward LH
1	MC62701-011 [1]	Stabilator Forward RH
1	MC62701-012 [1]	Stabilator Aft Bottom
1	MC62701-013 [1]	Stabilator Aft Top
1	MC62701-047	Stabilator Trim Aft
2	MC62701-056 [4]	Stab Trim Fwd LH and RH (Manual)
1	MC62701-057 [3]	Stabilator Trim Forward LH (Electric)
1	MC62701-014	Flap

PA28-235
S/N 28-7310001 thru 28-7710089
Complete Kit P/N PCKT235-06 (Manual Trim)
Complete Kit P/N PCKT235-07 (Electric Trim)
Stabilator Kit P/N PCKT-STAB-03 [1]

Qty	Part Number	Location
2	MC62701-099	Aileron Forward LH and RH
2	MC62701-003	Aileron Wing LH and RH
1	MC62701-004	Aileron Balance LH
1	MC62701-005	Aileron Balance RH
2	MC62701-100	Rudder Forward LH and RH
2	MC62701-008	Rudder Aft LH and RH
1	MC62701-113 [1]	Stabilator Forward LH
1	MC62701-114 [1]	Stabilator Forward RH
1	MC62701-012 [1]	Stabilator Aft Bottom
1	MC62701-013 [1]	Stabilator Aft Top
1	MC62701-047	Stabilator Trim Aft
2	MC62701-104 [4]	Stab Trim Fwd LH and RH (Manual)
1	MC62701-111 [3]	Stabilator Trim Forward LH (Electric)
1	MC62701-101	Flap

PA28-236
S/N 28-7911001 thru 28-8611008,
2811001 thru 2811050
Complete Kit P/N PCKT236-01 (Manual Trim)
Complete Kit P/N PCKT236-02 (Electric Trim)
Stabilator Kit P/N PCKT-STAB-03 [1]

Qty	Part Number	Location
2	MC62701-099	Aileron Forward LH and RH
2	MC62701-122	Aileron Wing LH and RH
1	MC62701-123	Aileron Balance LH
1	MC62701-124	Aileron Balance RH
2	MC62701-100	Rudder Forward LH and RH
2	MC62701-008	Rudder Aft LH and RH
1	MC62701-113 [1]	Stabilator Forward LH
1	MC62701-114 [1]	Stabilator Forward RH
1	MC62701-012 [1]	Stabilator Aft Bottom
1	MC62701-013 [1]	Stabilator Aft Top
1	MC62701-101	Flap
1	MC62701-047	Stabilator Trim Aft
2	MC62701-104 [4]	Stab Trim Fwd LH and RH (Manual)
1	MC62701-111 [3]	Stabilator Trim Forward LH (Electric)

[1] Stabilator kits to assist with Piper AD2013-02-13 include cables designated with [1] plus 2 each MS21251-B5S Barrels and 10 each MS21256-1 Locking Clips.
[2] Included in kits for manual trim aircraft only.
[3] Included in kits for electric trim aircraft only.
[4] Kits for electric trim aircraft include only one of this part number.

PA28-201T
S/N 28-7921001 thru 28-7921095
Complete Kit P/N PCKT201T-01 (Manual Trim)
Complete Kit P/N PCKT201T-02 (Electric Trim)
Stabilator Kit P/N PCKT-STAB-03 [1]

Qty	Part Number	Location
2	MC62701-099	Aileron Forward LH and RH
2	MC62701-122	Aileron Wing LH and RH
1	MC62701-123	Aileron Balance LH
1	MC62701-124	Aileron Balance RH
2	MC62701-100	Rudder Forward LH and RH
2	MC62701-008	Rudder Aft LH and RH
1	MC62701-113 [1]	Stabilator Forward LH
1	MC62701-114 [1]	Stabilator Forward RH
1	MC62701-012 [1]	Stabilator Aft Bottom
1	MC62701-013 [1]	Stabilator Aft Top
1	MC62701-101	Flap
1	MC62701-047	Stabilator Trim Aft
2	MC62701-104 [4]	Stab Trim Fwd LH and RH (Manual)
1	MC62701-111 [3]	Stabilator Trim Forward LH (Electric)

PA28R-180
S/N 28R-30005 thru 28R-30481,
28R-30483 thru 28R-31279,
28R-7130001 thru 28R-7130019
Complete Kit P/N PCKTR180-01 (Manual Trim)
Complete Kit P/N PCKTR180-02 (Electric Trim)
Stabilator Kit P/N PCKT-STAB-04 [1]

Qty	Part Number	Location
2	MC62701-002	Aileron Forward LH and RH
2	MC62701-003	Aileron Wing LH and RH
1	MC62701-004	Aileron Balance LH
1	MC62701-005	Aileron Balance RH
2	MC62701-006	Rudder Forward LH and RH
2	MC62701-064	Aft Rudder LH and RH
1	MC62701-062 [1]	Stabilator Fwd LH
1	MC62701-061 [1]	Stabilator Fwd RH
1	MC62701-012 [1]	Stabilator Aft Bottom
1	MC62701-013 [1]	Stabilator Aft Top
1	MC62701-014	Flap
1	MC62701-047	Stabilator Trim Aft
2	MC62701-056 [4]	Stab Trim Fwd LH and RH (Manual)
1	MC62701-057 [3]	Stabilator Trim Forward LH (Electric)

PA28R-200
S/N 28R-35001 thru 28R-35830,
28R-7135001 thru 28R-7135238
Complete Kit P/N PCKTR200-01 (Manual Trim)
Complete Kit P/N PCKTR200-02 (Electric Trim)
Stabilator Kit P/N PCKT-STAB-04 [1]

Qty	Part Number	Location
2	MC62701-002	Aileron Forward LH and RH
2	MC62701-003	Aileron Wing LH and RH
1	MC62701-004	Aileron Balance LH
1	MC62701-005	Aileron Balance RH
2	MC62701-006	Rudder Forward LH and RH
2	MC62701-064	Rudder Aft LH and RH
1	MC62701-062 [1]	Stabilator Fwd LH
1	MC62701-061 [1]	Stabilator Fwd RH
1	MC62701-012 [1]	Stabilator Aft Bottom
1	MC62701-013 [1]	Stabilator Aft Top
1	MC62701-014	Flap
1	MC62701-047	Stabilator Trim Aft
2	MC62701-056 [4]	Stab Trim Fwd LH and RH (Manual)
1	MC62701-057 [3]	Stabilator Trim Forward LH (Electric)

PA28R-200
S/N 28R-7235001 thru 28R-7635545
Complete Kit P/N PCKTR200-03 (Manual Trim)
Complete Kit P/N PCKTR200-04 (Electric Trim)
Stabilator Kit P/N PCKT-STAB-05 [1]

Qty	Part Number	Location
2	MC62701-099	Aileron Forward LH and RH
2	MC62701-003	Aileron Wing LH and RH
1	MC62701-004	Aileron Balance LH
1	MC62701-005	Aileron Balance RH
2	MC62701-100	Rudder Forward LH and RH
2	MC62701-064	Rudder Aft LH and RH
1	MC62701-103 [1]	Stabilator Forward LH
1	MC62701-102 [1]	Stabilator Forward RH
1	MC62701-012 [1]	Stabilator Aft Bottom
1	MC62701-013 [1]	Stabilator Aft Top
1	MC62701-101	Flap
1	MC62701-047	Stabilator Trim Aft
2	MC62701-104 [4]	Stab Trim Fwd LH and RH (Manual)
1	MC62701-111 [3]	Stabilator Trim Forward LH (Electric)

PA28R-201
S/N 28R-7737002 thru 28R-7837317,
2837001 thru 2837061
Complete Kit P/N PCKTR201-01 (Manual Trim)
Complete Kit P/N PCKTR201-02 (Electric Trim)
Stabilator Kit P/N PCKT-STAB-05 [1]

Qty	Part Number	Location
2	MC62701-099	Aileron Forward LH and RH
2	MC62701-143	Aileron Wing LH and RH
1	MC62701-123	Aileron Balance LH
1	MC62701-124	Aileron Balance RH

Kit continues in next column

Continued from previous column

Qty	Part Number	Location
2	MC62701-100	Rudder Forward LH and RH
2	MC62701-064	Rudder Aft LH and RH
1	MC62701-103 [1]	Stabilator Forward LH
1	MC62701-102 [1]	Stabilator Forward RH
1	MC62701-012 [1]	Stabilator Aft Bottom
1	MC62701-013 [1]	Stabilator Aft Top
1	MC62701-101	Flap
1	MC62701-047	Stabilator Trim Aft
2	MC62701-104 [4]	Stab Trim Fwd LH and RH (Manual)
1	MC62701-111 [3]	Stabilator Trim Forward LH (Electric)

PA28R-201T
S/N 28R-7703002 thru 28R-7803372,
2803001 thru 2803015
Complete Kit P/N PCKTR201T-01 (Manual Trim)
Complete Kit P/N PCKTR201T-02 (Electric Trim)
Stabilator Kit P/N PCKT-STAB-05 [1]

Qty	Part Number	Location
2	MC62701-099	Aileron Forward LH and RH
2	MC62701-143	Aileron Wing LH and RH
1	MC62701-123	Aileron Balance LH
1	MC62701-124	Aileron Balance RH
2	MC62701-100	Rudder Forward LH and RH
2	MC62701-064	Rudder Aft LH and RH
1	MC62701-103 [1]	Stabilator Forward LH
1	MC62701-102 [1]	Stabilator Forward RH
1	MC62701-012 [1]	Stabilator Aft Bottom
1	MC62701-013 [1]	Stabilator Aft Top
1	MC62701-101	Flap
1	MC62701-047	Stabilator Trim Aft
2	MC62701-104 [4]	Stab Trim Fwd LH and RH (Manual)
1	MC62701-111 [3]	Stabilator Trim Forward LH (Electric)

PA28RT-201
S/N 28R-7918001 thru 28R-8218026
Complete Kit P/N PCKTRT201-01 (Manual Trim)
Complete Kit P/N PCKTRT201-02 (Electric Trim)
Stabilator Kit P/N PCKT-STAB-06 [1]

Qty	Part Number	Location
2	MC62701-099	Aileron Forward LH and RH
2	MC62701-143	Aileron Wing LH and RH
1	MC62701-123	Aileron Balance LH
1	MC62701-124	Aileron Balance RH
1	MC62701-101	Flap
1	MC62701-102 [1]	Stabilator Forward RH
1	MC62701-103 [1]	Stabilator Forward LH
1	MC62701-169 [1]	Stabilator Aft Upper
1	MC62701-170 [1]	Stabilator Aft Lower
2	MC62701-189 [4]	Stab Trim Fwd LH and RH (Manual)
1	MC62701-155	Stabilator Trim Aft
2	MC62701-100	Rudder Forward LH and RH
1	MC62701-168	Rudder Aft
1	MC62701-191 [3]	Stabilator Trim Fwd LH (Electric)

PA28RT-201
S/N 28R-7918001 thru 28R-8218026
For aircraft with Altimatic IIIC Autopilot
Complete Kit P/N PCKTRT201-04 (Electric Trim)
Stabilator Kit P/N PCKT-STAB-06 [1]

Qty	Part Number	Location
2	MC62701-099	Aileron Forward LH and RH
2	MC62701-143	Aileron Wing LH and RH
1	MC62701-123	Aileron Balance LH
1	MC62701-124	Aileron Balance RH
1	MC62701-101	Flap
1	MC62701-102 [1]	Stabilator Forward RH
1	MC62701-103 [1]	Stabilator Forward LH
1	MC62701-169 [1]	Stabilator Aft Upper
1	MC62701-170 [1]	Stabilator Aft Lower
2	MC62701-189 [4]	Stab Trim Fwd LH and RH (Manual)
1	MC62701-155	Stabilator Trim Aft
2	MC62701-100	Rudder Forward RH
1	MC62701-168	Rudder Aft
1	MC62701-193	Stab Trim Fwd LH (Autopilots)

PA28RT-201T
S/N 28R-7931001 thru 28R-8631005,
2831001 thru 2831038
Complete Kit P/N PCKTRT201T-01 (Manual Trim)
Complete Kit P/N PCKTRT201T-02 (Electric Trim)
Stabilator Kit P/N PCKT-STAB-06 [1]

Qty	Part Number	Location
2	MC62701-099	Aileron Forward LH and RH
2	MC62701-143	Aileron Wing LH and RH
1	MC62701-123	Aileron Balance LH
1	MC62701-124	Aileron Balance RH
1	MC62701-101	Flap
1	MC62701-102 [1]	Stabilator Forward RH
1	MC62701-103 [1]	Stabilator Forward LH
1	MC62701-169 [1]	Stabilator Aft Upper
1	MC62701-170 [1]	Stabilator Aft Lower
2	MC62701-189 [4]	Stab Trim Fwd LH and RH (Manual)
1	MC62701-155	Stabilator Trim Aft
2	MC62701-100	Rudder Forward LH and RH
1	MC62701-168	Rudder Aft
1	MC62701-191 [3]	Stabilator Trim Fwd LH (Electric)

PA28RT-201T
S/N 28R-7931001 thru 28R-8631005,
2831001 thru 2831038
For aircraft with Altimatic IIIC Autopilot
Complete Kit P/N PCKTRT201T-04 (Electric Trim)
Stabilator Kit P/N PCKT-STAB-06 [1]

Qty	Part Number	Location
2	MC62701-099	Aileron Forward LH and RH
2	MC62701-143	Aileron Wing LH and RH
1	MC62701-123	Aileron Balance LH
1	MC62701-124	Aileron Balance RH
1	MC62701-101	Flap
1	MC62701-102 [1]	Stabilator Forward RH
1	MC62701-103 [1]	Stabilator Forward LH
1	MC62701-169 [1]	Stabilator Aft Upper
1	MC62701-170 [1]	Stabilator Aft Lower
1	MC62701-189 [2]	Stab Trim Fwd RH
1	MC62701-155	Stabilator Trim Aft
2	MC62701-100	Rudder Forward LH and RH
1	MC62701-168	Rudder Aft
1	MC62701-193	Stab Trim Fwd LH (Autopilots)

PA28S-180
S/N 28S-671 thru 28S-2171
Complete Kit P/N PCKTS180-01
Stabilator Kit P/N PCKT-STAB-02 [1]

Qty	Part Number	Location
2	MC62701-018	Aileron Wing LH and RH
1	MC62701-019	Aileron Balance LH
1	MC62701-020	Aileron Balance RH
2	MC62701-017	Aileron Forward LH and RH
2	MC62701-023	Rudder Aft LH and RH
1	MC62701-027 [1]	Stabilator Aft LH
1	MC62701-028 [1]	Stabilator Aft RH
1	MC62701-031	Stabilator Trim Aft

PA28S-180
S/N 28S-2172 thru 28S-5869,
28S-7105001 thru 28S-7205234
Complete Kit P/N PCKTS180-02 (Manual Trim)
Complete Kit P/N PCKTS180-03 (Electric Trim)
Stabilator Kit P/N PCKT-STAB-02 [1]

Qty	Part Number	Location
2	MC62701-018	Aileron Wing LH and RH
1	MC62701-019	Aileron Balance LH
1	MC62701-020	Aileron Balance RH
2	MC62701-017	Aileron Forward LH and RH
2	MC62701-023	Rudder Aft LH and RH
1	MC62701-027 [1]	Stabilator Aft LH
1	MC62701-028 [1]	Stabilator Aft RH
1	MC62701-031	Stabilator Trim Aft
1	MC62701-046 [2]	Stabilator Trim Forward LH (Manual)
1	MC62701-049 [3]	Stabilator Trim Forward LH (Electric)

PA32-260
S/N 32-1 thru 32-1320,
32-7100001 thru 32-7300076
Complete Kit P/N PCKT260-01 (Manual Trim)
Complete Kit P/N PCKT260-02 (Electric Trim)
Stabilator Kit P/N PCKT-STAB-07 [1]

Qty	Part Number	Location
2	MC62701-008	Rudder Aft LH and RH
2	MC62701-036	Aileron Forward LH and RH
2	MC62701-003	Aileron Wing LH and RH
1	MC62701-048	Aileron Balance LH
1	MC62701-005	Aileron Balance RH
2	MC62701-037 [1]	Rudder Fwd RH/Stabilator Fwd RH
1	MC62701-038	Rudder Forward LH
1	MC62701-040 [1]	Stabilator Forward LH
1	MC62701-012 [1]	Stabilator Aft LH
1	MC62701-013 [1]	Stabilator Aft RH
2	MC62701-041 [4]	Stab Trim Fwd LH and RH (Manual)
1	MC62701-042 [3]	Stabilator Trim Forward LH (Electric)
1	MC62701-047	Stabilator Trim Aft
1	MC62701-014	Flap

PA32-260
S/N 32-7400001 thru 32-7400061
Complete Kit P/N PCKT260-03 (Manual Trim)
Complete Kit P/N PCKT260-04 (Electric Trim)
Stabilator Kit P/N PCKT-STAB-07 [1]

Qty	Part Number	Location
1	MC62701-134	Rudder Aft LH
1	MC62701-008	Rudder Aft RH
1	MC62701-012 [1]	Stabilator Aft LH
1	MC62701-013 [1]	Stabilator Aft RH
2	MC62701-036	Aileron Forward LH and RH
2	MC62701-003	Aileron Wing LH and RH
1	MC62701-048	Aileron Balance LH
1	MC62701-005	Aileron Balance RH

Kit continues on next page

[1] Stabilator kits to assist with Piper AD2013-02-13 include cables designated with [1] plus 2 each MS21251-B5S Barrels and 10 each MS21256-1 Locking Clips.
[2] Included in kits for manual trim aircraft only.
[3] Included in kits for electric trim aircraft only.
[4] Kits for electric trim aircraft include only one of this part number.

Flight Control System
Flight Control Cables - Piper

Continued from previous page

Qty	Part Number	Location
2	MC62701-037 [1]	Rudder Fwd RH/Stabilator Fwd RH
1	MC62701-038	Rudder Forward LH
1	MC62701-040 [1]	Stabilator Forward LH
2	MC62701-041 [4]	Stab Trim Fwd LH and RH (Manual)
1	MC62701-042 [3]	Stabilator Trim Forward LH (Electric)
1	MC62701-047	Stabilator Trim Aft
1	MC62701-014	Flap

PA32-260
S/N 32-7500001 thru 32-7800008
Complete Kit P/N PCKT260-05 (Manual Trim)
Complete Kit P/N PCKT260-06 (Electric Trim)
Stabilator Kit P/N PCKT-STAB-07 [1]

Qty	Part Number	Location
2	MC62701-008	Rudder Aft LH and RH
1	MC62701-012 [1]	Stabilator Aft LH
1	MC62701-013 [1]	Stabilator Aft RH
2	MC62701-036	Aileron Forward LH and RH
2	MC62701-003	Aileron Wing LH and RH
1	MC62701-048	Aileron Balance LH
1	MC62701-005	Aileron Balance RH
3	MC62701-037 [1]	Rudder Fwd LH&RH/Stab Fwd RH
1	MC62701-040 [1]	Stabilator Forward LH
2	MC62701-041 [4]	Stab Trim Fwd LH and RH (Manual)
1	MC62701-042 [3]	Stabilator Trim Forward LH (Electric)
1	MC62701-047	Stabilator Trim Aft
1	MC62701-014	Flap

PA32-300
S/N 32-40000 thru 32-41018,
32-7140001 thru 32-7340201
Complete Kit P/N PCKT300-01 (Manual Trim)
Complete Kit P/N PCKT300-02 (Electric Trim)
Stabilator Kit P/N PCKT-STAB-07 [1]

Qty	Part Number	Location
2	MC62701-008	Rudder Aft LH and RH
1	MC62701-012 [1]	Stabilator Aft LH
1	MC62701-013 [1]	Stabilator Aft RH
2	MC62701-036	Aileron Forward LH and RH
2	MC62701-003	Aileron Wing LH and RH
1	MC62701-048	Aileron Balance
1	MC62701-005	Aileron Balance RH
2	MC62701-037 [1]	Rudder Fwd RH/Stab Fwd RH
1	MC62701-038	Rudder Forward LH
1	MC62701-040 [1]	Stabilator Forward LH
2	MC62701-041 [4]	Forward Stabilator Trim
1	MC62701-042 [3]	Electric Trim
1	MC62701-047	Stabilator Trim Aft
1	MC62701-014	Flap

PA32-300
S/N 32-7440001 thru 32-7440182
Complete Kit P/N PCKT300-03 (Manual Trim)
Complete Kit P/N PCKT300-04 (Electric Trim)
Stabilator Kit P/N PCKT-STAB-07 [1]

Qty	Part Number	Location
1	MC62701-134	Rudder Aft LH
1	MC62701-008	Rudder Aft RH
1	MC62701-012 [1]	Stabilator Aft LH
1	MC62701-013 [1]	Stabilator Aft RH
2	MC62701-036	Aileron Forward LH and RH
2	MC62701-003	Aileron Wing LH and RH
1	MC62701-048	Aileron Balance LH
1	MC62701-005	Aileron Balance RH
2	MC62701-037 [1]	Rudder Fwd RH/Stab Fwd RH
1	MC62701-038	Rudder Forward LH
1	MC62701-040 [1]	Stabilator Forward LH
2	MC62701-041 [4]	Stab Trim Fwd LH and RH (Manual)
1	MC62701-042 [3]	Stabilator Trim Forward LH (Electric)
1	MC62701-047	Stabilator Trim Aft
1	MC62701-014	Flap

PA32-300
S/N 32-7540001 thru 32-7940282
Complete Kit P/N PCKT300-05 (Manual Trim)
Complete Kit P/N PCKT300-06 (Electric Trim)
Stabilator Kit P/N PCKT-STAB-07 [1]

Qty	Part Number	Location
2	MC62701-008	Rudder Aft LH and RH
1	MC62701-012 [1]	Stabilator Aft LH
1	MC62701-013 [1]	Stabilator Aft RH
2	MC62701-036	Aileron Forward LH and RH
2	MC62701-003	Aileron Wing LH and RH
1	MC62701-048	Aileron Balance LH
1	MC62701-005	Aileron Balance RH
3	MC62701-037 [1]	Rudd Fwd LH & RH/Stab Fwd RH
1	MC62701-040 [1]	Stabilator Forward LH
2	MC62701-041 [4]	Stab Trim Fwd LH and RH (Manual)
1	MC62701-042 [3]	Stabilator Trim Forward LH (Electric)
1	MC62701-047	Stabilator Trim Aft
1	MC62701-014	Flap

PA32-301
S/N 32-8006001 thru 32-8606023, 3206001 thru 3206060
Complete Kit P/N PCKT301-01 (Manual Trim)
Complete Kit P/N PCKT301-02 (Electric Trim)
Stabilator Kit P/N PCKT-STAB-09 [1]

Qty	Part Number	Location
2	MC62701-036	Aileron Forward LH and RH
2	MC62701-202	Aileron Wing LH and RH
1	MC62701-200	Aileron Balance LH
1	MC62701-201	Aileron Balance RH
1	MC62701-014	Flap
1	MC62701-208 [1]	Stabilator Aft LH
1	MC62701-205 [1]	Stabilator Aft RH
1	MC62701-207 [1]	Stabilator Forward LH
1	MC62701-047	Stabilator Trim Aft
2	MC62701-041 [4]	Stab Trim Fwd LH and RH (Manual)
1	MC62701-042 [3]	Stabilator Trim Forward LH (Electric)
2	MC62701-008	Rudder Aft LH and RH
3	MC62701-037 [1]	Rudd Fwd LH & RH/Stab Fwd RH

PA32-301
S/N 32-8406001 thru 32-8606023, 3206001 thru 3206060
For aircraft with Century 31 Autopilot
Complete Kit P/N PCKT301-04 (Electric Trim)
Stabilator Kit P/N PCKT-STAB-09 [1]

Qty	Part Number	Location
2	MC62701-036	Aileron Forward LH and RH
2	MC62701-202	Aileron Wing LH and RH
1	MC62701-200	Aileron Balance LH
1	MC62701-201	Aileron Balance RH
1	MC62701-014	Flap
1	MC62701-208 [1]	Stabilator Aft LH
1	MC62701-205 [1]	Stabilator Aft RH
1	MC62701-207 [1]	Stabilator Forward LH
1	MC62701-047	Stabilator Trim Aft
1	MC62701-041 [2]	Stab Trim Fwd RH
1	MC62701-135	Stabilator Trim Forward
2	MC62701-008	Rudder Aft LH and RH
3	MC62701-037 [1]	Rudd Fwd LH & RH/Stab Fwd RH

PA32-301T
S/N 32-8024001 thru 32-8424002
Complete Kit P/N PCKT301T-01 (Manual Trim)
Complete Kit P/N PCKT301T-02 (Electric Trim)
Stabilator Kit P/N PCKT-STAB-09 [1]

Qty	Part Number	Location
2	MC62701-036	Aileron Forward LH and RH
2	MC62701-202	Aileron Wing LH and RH
1	MC62701-200	Aileron Balance LH
1	MC62701-201	Aileron Balance RH
1	MC62701-014	Flap
1	MC62701-207 [1]	Stabilator Forward LH
1	MC62701-208 [1]	Stabilator Aft LH
1	MC62701-205 [1]	Stabilator Aft RH
1	MC62701-047	Stabilator Trim Aft
2	MC62701-041 [4]	Stab Trim Fwd LH and RH (Manual)
3	MC62701-037 [1]	Rudd Fwd LH & RH/Stab Fwd RH
2	MC62701-008	Rudder Aft LH and RH
1	MC62701-042 [3]	Stabilator Trim Forward LH (Electric)

PA32-301T
S/N S/N 32-8024001 thru 32-8424002
For aircraft with Century 31 Autopilot
Complete Kit P/N PCKT301T-04 (Electric Trim)
Stabilator Kit P/N PCKT-STAB-09 [1]

Qty	Part Number	Location
2	MC62701-036	Aileron Forward LH and RH
2	MC62701-202	Aileron Wing LH and RH
1	MC62701-200	Aileron Balance LH
1	MC62701-201	Aileron Balance RH
1	MC62701-014	Flap
1	MC62701-207 [1]	Stabilator Forward LH
1	MC62701-208 [1]	Stabilator Aft LH
1	MC62701-205 [1]	Stabilator Aft RH
1	MC62701-047	Stabilator Trim Aft
1	MC62701-041	Stab Trim Fwd RH
3	MC62701-037 [1]	Rudd Fwd LH & RH/Stab Fwd RH
2	MC62701-008	Rudder Aft LH and RH
1	MC62701-135	Stabilator Trim Fwd LH (Autopilot)

PA32R-300
S/N 32R-7680001 thru 32R-7880068
Complete Kit P/N PCKTR300-01 (Manual Trim)
Complete Kit P/N PCKTR300-02 (Electric Trim)
Stabilator Kit P/N PCKT-STAB-07 [1]

Qty	Part Number	Location
2	MC62701-008	Rudder Aft LH and RH
1	MC62701-012 [1]	Stabilator Aft LH
1	MC62701-013 [1]	Stabilator Aft RH
2	MC62701-036	Aileron Forward LH and RH
2	MC62701-003	Aileron Wing LH and RH
1	MC62701-048	Aileron Balance LH
1	MC62701-005	Aileron Balance RH
3	MC62701-037 [1]	Rudd Fwd LH & RH/Stab Fwd RH
1	MC62701-040 [1]	Stabilator Forward LH
2	MC62701-041 [4]	Stab Trim Fwd LH and RH (Manual)
1	MC62701-042 [3]	Stabilator Trim Forward LH (Electric)
1	MC62701-047	Stabilator Trim Aft
1	MC62701-014	Flap

PA32R-301
S/N 32R-8013001 thru 32R-8613006,
3213001 thru 3213103
Complete Kit P/N PCKTR301-01 (Manual Trim)
Complete Kit P/N PCKTR301-02 (Electric Trim)
Stabilator Kit P/N PCKT-STAB-09 [1]

Qty	Part Number	Location
2	MC62701-036	Aileron Forward LH and RH
2	MC62701-199	Aileron Wing LH and RH
1	MC62701-200	Aileron Balance LH
1	MC62701-201	Aileron Balance RH
1	MC62701-014	Flap
1	MC62701-207 [1]	Stabilator Forward LH
1	MC62701-205 [1]	Stabilator Aft RH
1	MC62701-208 [1]	Stabilator Aft LH
1	MC62701-047	Stabilator Trim Aft
2	MC62701-041 [4]	Stab Trim Fwd LH and RH (Manual)
3	MC62701-037 [1]	Rudd Fwd LH & RH/Stab Fwd RH
2	MC62701-008	Rudder Aft LH and RH
1	MC62701-042 [3]	Stabilator Trim Forward LH (Electric)

PA32R-301T
S/N 32R-8029001 thru 32R-8629008,
3229001 thru 3229003
Complete Kit P/N PCKTR301T-01 (Manual Trim)
Complete Kit P/N PCKTR301T-02 (Electric Trim)
Stabilator Kit P/N PCKT-STAB-09 [1]

Qty	Part Number	Location
2	MC62701-036	Aileron Forward LH and RH
2	MC62701-199	Aileron Wing LH and RH
1	MC62701-200	Aileron Balance LH
1	MC62701-201	Aileron Balance RH
1	MC62701-014	Flap
1	MC62701-207 [1]	Stabilator Forward LH
1	MC62701-205 [1]	Stabilator Aft RH
1	MC62701-208 [1]	Stabilator Aft LH
1	MC62701-047	Stabilator Trim Aft
2	MC62701-041 [4]	Stab Trim Fwd LH and RH (Manual)
3	MC62701-037 [1]	Rudd Fwd LH & RH/Stab Fwd RH
2	MC62701-008	Rudder Aft LH and RH
1	MC62701-042 [3]	Stabilator Trim Forward LH (Electric)

PA32RT-300
S/N 32R-7885001 thru 32R-7985125
Complete Kit P/N PCKTRT300-01 (Manual Trim)
Complete Kit P/N PCKTRT300-02 (Electric Trim)
Stabilator Kit P/N PCKT-STAB-10 [1]

Qty	Part Number	Location
2	MC62701-036	Aileron Forward LH and RH
2	MC62701-003	Aileron Wing LH and RH
1	MC62701-048	Aileron Balance LH
1	MC62701-005	Aileron Balance RH
3	MC62701-037 [1]	Rudd Fwd LH & RH/Stab Fwd RH
1	MC62701-157	Rudder Aft
1	MC62701-040 [1]	Stabilator Forward LH
1	MC62701-159 [1]	Stabilator Aft LH
1	MC62701-158 [1]	Stabilator Aft RH
2	MC62701-041 [4]	Stab Trim Fwd LH and RH (Manual)
1	MC62701-137	Stabilator Trim Aft
1	MC62701-014	Flap

PA32RT-300
S/N 32R-7885001 thru 32R-7985013,
For aircraft with Altimatic IIIC Autopilot
Complete Kit P/N PCKTRT300-05 (Electric Trim)
Stabilator Kit P/N PCKT-STAB-10 [1]

Qty	Part Number	Location
2	MC62701-036	Aileron Forward LH and RH
2	MC62701-003	Aileron Wing LH and RH
1	MC62701-048	Aileron Balance LH
1	MC62701-005	Aileron Balance RH
3	MC62701-037 [1]	Rudd Fwd LH & RH/Stab Fwd RH
1	MC62701-157	Rudder Aft
1	MC62701-040 [1]	Stabilator Forward LH
1	MC62701-159 [1]	Stabilator Aft LH
1	MC62701-158 [1]	Stabilator Aft RH
1	MC62701-041	Stab Trim Fwd RH
1	MC62701-137	Stabilator Trim Aft
1	MC62701-135	Stab Trim Fwd LH & RH (Autopilot)
1	MC62701-014	Flap

PA32RT-300
S/N 32R-7985014 thru 32R-7985125,
For aircraft with Altimatic IIIC Autopilot
Complete Kit P/N PCKTRT300-06 (Electric Trim)
Stabilator Kit P/N PCKT-STAB-10 [1]

Qty	Part Number	Location
2	MC62701-036	Aileron Forward LH and RH
2	MC62701-003	Aileron Wing LH and RH
1	MC62701-048	Aileron Balance LH
1	MC62701-005	Aileron Balance RH

Kit continues on next page

[1] Stabilator kits to assist with Piper AD2013-02-13 include cables designated with [1] plus 2 each MS21251-B5S Barrels and 10 each MS21256-1 Locking Clips.
[2] Included in kits for manual trim aircraft only.
[3] Included in kits for electric trim aircraft only.
[4] Kits for electric trim aircraft include only one of this part number.

Continued from previous page

Qty	Part Number	Location
3	MC62701-037 1	Rudd Fwd LH & RH/Stab Fwd RH
1	MC62701-157	Rudder Aft
1	MC62701-040 1	Stabilator Forward LH
1	MC62701-159 1	Stabilator Aft LH
1	MC62701-158 1	Stabilator Aft RH
1	MC62701-041	Stab Trim Fwd RH
2	MC62701-137	Stabilator Trim Aft
1	MC62701-183	Stab Trim Fwd LH & RH (Autopilot)

PA32RT-300T
S/N 32R-7887001 thru 32R-7987146
Complete Kit P/N PCKTRT300T-01 (Manual Trim)
Complete Kit P/N PCKTRT300T-02 (Electric Trim)
Stabilator Kit P/N PCKT-STAB-10 1

Qty	Part Number	Location
2	MC62701-036	Aileron Forward LH and RH
2	MC62701-003	Aileron Wing LH and RH
1	MC62701-048	Aileron Balance LH
1	MC62701-005	Aileron Balance RH
3	MC62701-037 1	Rudd Fwd LH & RH/Stab Fwd RH
1	MC62701-157	Rudder Aft
1	MC62701-040 1	Stabilator Forward LH
1	MC62701-159 1	Stabilator Aft LH
1	MC62701-158 1	Stabilator Aft RH
2	MC62701-041 4	Stab Trim Fwd RH
1	MC62701-137	Stabilator Trim Aft
1	MC62701-042 3	Stabilator Trim Fwd LH (Electric)

PA32RT-300T
S/N 32R-7887003, 32R-7887005 thru 32R-7887050,
For aircraft with Altimatic IIIC Autopilot
32R-7887052 thru 32R-7887307,
32R-7987001 thru 32R-7987035
Complete Kit P/N PCKTRT300T-05 (Electric Trim)
Stabilator Kit P/N PCKT-STAB-10 1

Qty	Part Number	Location
2	MC62701-036	Aileron Forward LH and RH
2	MC62701-003	Aileron Wing LH and RH
1	MC62701-048	Aileron Balance LH
1	MC62701-005	Aileron Balance RH
3	MC62701-037 1	Rudd Fwd LH & RH/Stab Fwd RH
1	MC62701-157	Rudder Aft
1	MC62701-040 1	Stabilator Forward LH
1	MC62701-159 1	Stabilator Aft LH
1	MC62701-158 1	Stabilator Aft RH
1	MC62701-041	Stab Trim Fwd RH
1	MC62701-137	Stabilator Trim Aft
1	MC62701-135	Stab Trim Fwd LH & RH (Autopilot)

PA32RT-300T
S/N 32R-7987004, 32R-7987051,
32R-7987036 thru 32R-7987146
For aircraft with Altimatic IIIC Autopilot
Complete Kit P/N PCKTRT300T-06 (Electric Trim)
Stabilator Kit P/N PCKT-STAB-10 1

Qty	Part Number	Location
2	MC62701-036	Aileron Forward LH and RH
2	MC62701-003	Aileron Wing LH and RH
1	MC62701-048	Aileron Balance LH
1	MC62701-005	Aileron Balance RH
3	MC62701-037 1	Rudd Fwd LH & RH/Stab Fwd RH
1	MC62701-157	Rudder Aft
1	MC62701-040 1	Stabilator Forward LH
1	MC62701-159 1	Stabilator Aft LH
1	MC62701-158 1	Stabilator Aft RH
1	MC62701-041	Stab Trim Fwd RH
1	MC62701-137	Stabilator Trim Aft
1	MC62701-183	Stab Trim Fwd LH & RH (Autopilot)

PA32S-300
S/N 32S-40000 thru 32S-7240147
Complete Kit P/N PCKTS300-01 (Manual Trim)
Complete Kit P/N PCKTS300-02 (Electric Trim)
Stabilator Kit P/N PCKT-STAB-08 1

Qty	Part Number	Location
2	MC62701-023	Rudder Aft LH and RH
2	MC62701-051 1	Rudder Fwd RH/Stab Fwd RH
1	MC62701-037	Rudder Forward LH
1	MC62701-027 1	Stabilator Aft LH
1	MC62701-028 1	Stabilator Aft RH
1	MC62701-053 1	Stabilator Forward LH
2	MC62701-050	Aileron Forward LH and RH
2	MC62701-018	Aileron Wing LH and RH
1	MC62701-055	Aileron Balance LH
1	MC62701-020	Aileron Balance RH
1	MC62701-047	Stabilator Trim Aft
2	MC62701-054 4	Stab Trim Fwd LH and RH (Manual)
1	MC62701-060 3	Stabilator Trim Fwd LH (Electric)

PA34-200
S/N 34-7250001 thru 34-7450220
Complete Kit P/N PCKT200-01 (Manual Trim)
Complete Kit P/N PCKT200-05 (Electric Trim)
Stabilator Kit P/N PCKT-STAB-11 1

Qty	Part Number	Location
2	MC62701-036	Aileron Forward LH and RH
2	MC62701-074	Aileron Wing LH and RH
1	MC62701-076	Aileron Balance LH
1	MC62701-075	Aileron Balance RH
2	MC62701-093	Aileron/Rudder Interconnect Aft
2	MC62701-094	Aileron/Rudder Interconnect Fwd
2	MC62701-081	Rudder Forward
2	MC62701-072	Rudder Aft
2	MC62701-069	Rudder Trim Fwd
1	MC62701-070	Rudder Trim Aft
1	MC62701-078 1	Stabilator Forward LH
1	MC62701-037 1	Stabilator Forward RH
1	MC62701-079 1	Stabilator Aft Upper
1	MC62701-080 1	Stabilator Aft Lower
2	MC62701-077 4	Stab Trim Fwd LH and RH (Manual)
1	MC62701-073	Stabilator Trim Aft
1	MC62701-071	Flap
1	MC62701-097 3	Stab Trim Fwd LH&RH (Autopilot)

PA34-200
S/N 34-7250001 thru 34-7450024,
34-7450025 thru 34-7450220 with
Altimatic IIIB Autopilot If Kit 760-776 installed
Complete Kit P/N PCKT200-10 (Electric Trim)
Stabilator Kit P/N PCKT-STAB-11 1

Qty	Part Number	Location
2	MC62701-036	Aileron Forward LH and RH
2	MC62701-074	Aileron Wing LH and RH
1	MC62701-076	Aileron Balance LH
1	MC62701-075	Aileron Balance RH
2	MC62701-093	Aileron/Rudder Interconnect Aft
2	MC62701-094	Aileron/Rudder Interconnect Fwd
2	MC62701-081	Rudder Forward
2	MC62701-072	Rudder Aft
2	MC62701-069	Rudder Trim Fwd
1	MC62701-070	Rudder Trim Aft
1	MC62701-078 1	Stabilator Forward LH
1	MC62701-037 1	Stabilator Forward RH
1	MC62701-079 1	Stabilator Aft Upper
1	MC62701-080 1	Stabilator Aft Lower
1	MC62701-077	Stab Trim Fwd RH
1	MC62701-073	Stabilator Trim Aft
1	MC62701-071	Flap
1	MC62701-097	Stab Trim Fwd LH (Autopilot)
2	MC62701-128	Interconnect

PA34-200T
S/N 34-7570001 - 34-8170092
For aircraft with Altimatic IIIB Autopilot
Complete Kit P/N PCKT200T-01 (Manual Trim)
Complete Kit P/N PCKT200T-02 (Electric Trim)
Stabilator Kit P/N PCKT-STAB-12 1

Qty	Part Number	Location
2	MC62701-036	Aileron Forward LH and RH
2	MC62701-127	Aileron Wing LH and RH
1	MC62701-125	Aileron Balance LH
1	MC62701-126	Aileron Balance RH
2	MC62701-081	Rudder Forward
1	MC62701-072	Rudder Aft
2	MC62701-069	Rudder Trim Control Forward
1	MC62701-070	Rudder Trim Control Aft
1	MC62701-078 1	Stabilator Forward LH
1	MC62701-037 1	Stabilator Forward RH
1	MC62701-129 1	Stabilator Aft Upper
1	MC62701-080 1	Stabilator Aft Lower
2	MC62701-077 4	Stab Trim Fwd LH and RH (Manual)
1	MC62701-073	Stabilator Trim Aft
1	MC62701-071	Flap
1	MC62701-097 3	Stab Trim Fwd LH (Electric)(Autopilot)

PA34-220T
S/N 34-8133001 thru 34-8633031,
3433001 thru 3433172, 3447001 thru 3449999
Complete Kit P/N PCKT220T-01
Stabilator Kit P/N PCKT-STAB-12 1

Qty	Part Number	Location
2	MC62701-228	Aileron Forward LH and RH
2	MC62701-127	Aileron Wing LH and RH
1	MC62701-125	Aileron Balance LH
1	MC62701-126	Aileron Balance RH
2	MC62701-081	Rudder Forward
1	MC62701-072	Rudder Aft
2	MC62701-069	Rudder Trim Control Forward
1	MC62701-070	Rudder Trim Control Aft
1	MC62701-078 1	Stabilator Forward LH
1	MC62701-037 1	Stabilator Forward RH
1	MC62701-129 1	Stabilator Aft Upper
1	MC62701-080 1	Stabilator Aft Lower
2	MC62701-077 4	Stab Trim Fwd LH and RH (Manual)
2	MC62701-073	Stabilator Trim Aft
1	MC62701-071	Flap
1	MC62701-097	Stab Trim Fwd LH (Electric)(Autopilot)

1 Stabilator kits to assist with Piper AD2013-02-13 include cables designated with 1 plus 2 each MS21251-B5S Barrels and 10 each MS21256-1 Locking Clips.
2 Included in kits for manual trim aircraft only.
3 Included in kits for electric trim aircraft only.
4 Kits for electric trim aircraft include only one of this part number.
5 Kits for electric trim aircraft include two of this part number.

General Piper Cable Notes: Corrosion Protection

All Piper cables are coated with a modified MIL-PRF-16173 compound. It provides additional corrosion protection beyond the standard MIL-SPEC rust preventive oil. This provides both exceptional wear resistance and corrosion protection for many years.

Flight Control System
Flight Control Cables - Beechcraft

Models 19, 23 and 24 Musketeer, Sport, Sundowner
A23-19,19A,M19A,B19,23,A23,A23A,B23,C23,
A23-24,A24

Part Number	Location
MCNAS30245-2053	Stabilator Tab
MCNAS31424-0870	Stabilator
MCNAS31424-0934	Rudder Aft LH
MCNAS31424-1152	Stabilator
MCNAS31424-1242	Rudder Fwd RH
MCNAS31425-0820	Stabilator
MCNAS31425-0931	Rudder Aft RH
MCNAS31425-1220	Rudder Fwd LH
MCNAS31425-1411	Stabilator/Elevator Fwd
MCNAS31426-1170	Aileron RH
MCNAS31427-1131	Aileron
MCNAS31427-1370	Aileron LH

Model 24 Musketeer, Sierra
A24R,B24R,C24R

Part Number	Location
MCNAS30245-2053	Stabilator Tab
MCNAS31424-0870	Stabilator
MCNAS31424-0934	Rudder Aft LH
MCNAS31424-1242	Rudder Fwd RH
MCNAS31424-1340	Stabilator
MCNAS31425-0820	Stabilator
MCNAS31425-0931	Rudder Aft RH
MCNAS31425-1220	Rudder Fwd LH
MCNAS31425-1345	Stabilator
MCNAS31426-1170	Aileron RH
MCNAS31427-1180	Aileron
MCNAS31427-1370	Aileron LH

Model 33 Debonair and Bonanza
35-33,35-A33,35-B33,35-C33,35-C33A, E33,E33A,F33,G33

Part Number	Location	
MC33-524000-17	Elevator Fwd	Note 1
MC33-524000-47 [2]	Elevator Tab	Note 2
MC33-524000-61	Elevator Down	Note 3
MC33-524001-1 [2]	Elevator Tab	Note 4
MC35-524314 [2]	Aileron	
MC36-521011-1	Aileron Aft	
MC36-521011-3	Aileron Fwd	
MC36-524000-29 [2]	Elevator Tab RH	
MC36-524000-31 [2]	Elevator Tab LH	
MCNAS30266-3242	Elevator Tab	Note 5
MCNAS30422-0255	Aileron	
MCNAS30426-0603	Aileron	
MCNAS30434-1520	Elevator Up	Note 3
MCNAS30435-0564	Elevator	
MCNAS30435-1325	Rudder Fwd	
MCNAS30466-0173	Aileron	Note 6
MCNAS31237-0790	Elevator Tab	

Note 1: For model 35-33 S/N CD-1 thru CD-224, CD-233, CD234, CD236, CD-241, CD246 thru CD-250 only.
Note 2: For model 35-33 only.
Note 3: Not required for model 35-33.
Note 4: For models 35-B33, 35-C33, 35-C33A s/n CE-1 thru CE-27, and E33 only.
Note 5: For model 35-A33 only.
Note 6: Not required for models F33 or G33.

Model 33 Debonair and Bonanza
F33A

Part Number	Location	
MC002-524028-23 [2]	Elevator Tab	Note 1
MC33-524000-61	Elevator Down	Note 2
MC33-524028 [2]	Elevator Tab	Note 3
MC33-524029	Elevator Down	Note 4
MC35-524314 [2]	Aileron	
MC36-521011-1	Aileron Aft	
MC36-521011-3	Aileron Fwd	
MC36-524000-29 [2]	Elevator Tab RH	Note 5
MC36-524000-31 [2]	Elevator Tab LH	
MCNAS30422-0255	Aileron	Note 5
MCNAS30426-0603	Aileron	Note 5
MCNAS30434-1520	Elevator Up	
MCNAS30435-0564	Elevator	
MCNAS30435-1321	Rudder Fwd	Note 3
MCNAS30435-1325	Rudder Fwd	Note 2
MCNAS30466-0173	Aileron	Note 5
MCNAS31237-0204	Elevator Tab	Note 1
MCNAS31237-0284	Elevator Tab	Note 6
MCNAS31237-0520	Elevator Tab	Note 7
MCNAS31237-0534	Elevator Tab	Note 3
MCNAS31237-0790	Elevator	Note 2

Note 1: CE-678 thru CE-1791
Note 2: CE-290 thru CE-315
Note 3: CE-316 thru CE-510
Note 4: CE-316 thru CE-1791
Note 5: CE-290 thru CE-510
Note 6: CE-511 thru CE-677
Note 7: CE-511 thru CE-1791

Model 33 Debonair and Bonanza
F33C

Part Number	Location	
MC33-524000-61	Elevator Down	
MC35-524314 [2]	Aileron	Note 1
MC35-524314-22 [2]	Aileron Fuselage	Note 2
MC36-521011-1	Aileron Aft	Note 1
MC36-521011-3	Aileron Fwd	Note 1
MC36-524000-29 [2]	Elevator Tab RH	
MC36-524000-3 [2]	Elevator Tab LH	
MCNAS30422-0255	Aileron	
MCNAS30426-0603	Aileron	
MCNAS30435-0564	Elevator	
MCNAS30435-1325	Rudder Fwd	
MCNAS30466-0173	Aileron	
MCNAS30537-0647	Aileron Aft	Note 2
MCNAS30537-0667	Aileron Fwd	Note 2
MCNAS31237-0790	Elevator	

Note 1: CJ-26 thru CJ-128
Note 2: CJ-129 thru CJ-179

Model 35 Bonanza
S/N D-0001 thru D-1500
Complete Kit P/N BCKT35-01

Part Number	Location	Qty
MC35-524004	Elevator Fwd	1
MCNAS30227-0590	Tab Actuating	4
MCNAS30266-3500	Elevator Trim Tab Fwd	1
MCNAS30266-3636	Elevator Trim Tab Fwd	1
MCNAS30425-0082	Elevator Aft	1
MCNAS30436-0197	Elevator Aft	1
35-524030 [4]	Tab Drum	1
35-524294 [4]	Bungee	1
35-524531-2 [4]	Indicator Actuating	1
MCNAS30425-0100	Rudder Aft RH	1
MCNAS30425-0106	Rudder Aft LH	1
MCNAS30433-0255	Rudder Aft	1
MCNAS31414-1875	Rudder FWD	2
MCNAS30422-0256	Aileron Fwd LH	1
MCNAS30424-0397	Aileron Center LH	1
MCNAS305-24-0514	Aileron Lower RH	1
MCNAS305-25-0546	Cable	1
MCNAS305-34-0514	Cable	1
MCNAS305-34-0640	Cable	1
MCNAS305-35-0546	Cable	1
MCNAS305-35-0672	Cable	1
MCNAS31415-0152	Aileron Aft LH	1
MCNAS31415-0472	Aileron Aft RH	1
35-524174 [4]	Cable Assy, Fwd Aileron	1
35-815109 [4]	Landing Gear Up Lock	2

Model 35 Bonanza
A35,B35
S/N D-1501 thru D-2680
Complete Kit P/N BCKT35-02

Part Number	Location	Qty
MCNAS30227-0590	Tab Actuating	4
MCNAS30266-3500	Elevator Trim Tab Fwd	1
MCNAS30266-3636	Elevator Trim Tab Fwd	1
MCNAS30425-0082	Elevator Aft	1
MCNAS30436-0197	Elevator Aft	1
MC35-524004	Elevator Fwd	1
35-524030 [4]	Tab Drum	1
35-524294 [4]	Cable Assy, Bungee	1
35-524531-2 [4]	Indicator Actuating	1
MCNAS30425-0100	Rudder Aft RH	1
MCNAS30425-0106	Rudder Aft LH	1
MCNAS30433-0255	Rudder Aft	1
MCNAS31414-1871	Rudder Fwd	2
MCNAS31414-1875	Rudder Fwd	2
MCNAS30422-0256	Aileron Fwd LH	1
MCNAS30424-0610	Aileron Center RH	1
MCNAS30426-0603	Aileron	1
MCNAS30466-0170	Aileron Center	1
MC36-521011-1	Aileron	1
MC36-521011-3	Aileron	1
MC35-524314	Cable/Chain, Aileron	1
35-815109 [4]	Landing Gear Up Lock	2

Model 35 Bonanza
C35,D35,E35,F35,G35
S/N D-2681 thru D-4865
Complete Kit P/N BCKT35-03

Part Number	Location	Qty
MCNAS30227-0590	Tab Actuating	4
MCNAS30266-3500	Elevator Trim Tab Fwd	1
MCNAS30266-3636	Elevator Trim Tab Fwd	1
MCNAS30425-0082	Elevator Aft	1
MCNAS30436-0197	Elevator Aft	1
MC35-524385	Elevator Fwd	1
35-524030 [4]	Tab Drum	1
35-524383-4 [4]	Cable Assy, Bungee	1
35-524531-2 [4]	Indicator Actuating	1
MCNAS30425-0100	Rudder Aft RH	1
MCNAS30425-0106	Rudder Aft LH	1
MCNAS30433-0255	Rudder Aft	1
MCNAS31414-1871	Rudder Fwd	2

Kit continues in next column

Continued from previous column

Part Number	Location	Qty
MCNAS31414-1875	Rudder Fwd	2
MCNAS30422-0256	Aileron Fwd LH	1
MCNAS30424-0610	Aileron Center RH	1
MCNAS30426-0603	Aileron	1
MCNAS30466-0170	Aileron Center	1
MC36-521011-1	Aileron	1
MC36-521011-3	Aileron	1
MC35-524314	Cable/Chain, Aileron	1
35-815109 [4]	Landing Gear Up Lock	2

Model 35 Bonanza
H35,J35
S/N D-4866 thru D-5725
Complete Kit P/N BCKT35-04

Part Number	Location	Qty
MCNAS30266-3506	Elevator Trim Tab	1
MCNAS30327-0581	Elevator Trim	1
MCNAS30327-0587	Elevator Trim	1
MCNAS30327-0597	Elevator Trim	1
MCNAS30327-0605	Elevator Trim	1
MCNAS30425-0082	Elevator Aft	1
MCNAS30436-0197	Elevator Aft	1
MC35-524382	Elevator Tab Aft	1
MC35-524385	Elevator Fwd	1
35-524030 [4]	Tab Drum	1
35-524383-4 [4]	Cable Assy, Bungee	1
35-524531-2 [4]	Indicator Actuating	1
MCNAS30425-0100	Rudder Aft RH	1
MCNAS30425-0106	Rudder Aft LH	1
MCNAS30433-0255	Rudder Aft	1
MCNAS31414-1871	Rudder Fwd	2
MCNAS30422-0255	Aileron	1
MCNAS30426-0603	Aileron	1
MCNAS30466-0173	Aileron	
MC36-521011-1	Aileron	1
MC36-521011-3	Aileron	1
MC35-524314	Cable/Chain, Aileron	1
35-815109 [4]	Landing Gear Up Lock	1

Model 35 Bonanza
K35 [1]
S/N D-5726 thru D-5727, D-5729 thru D-5747
Complete Kit P/N BCKT35-05

Part Number	Location	Qty
MCNAS30266-3506	Elevator Trim Tab	1
MCNAS30327-0581	Elevator Trim	1
MCNAS30327-0587	Elevator Trim	1
MCNAS30327-0597	Elevator Trim	1
MCNAS30327-0605	Elevator Trim	1
MCNAS30425-0082	Elevator Aft	1
MCNAS30436-0197	Elevator Aft	1
MC35-524382	Elevator Tab Aft	1
MC35-524385	Elevator Fwd	1
35-524030 [4]	Tab Drum	1
35-524383-4 [4]	Cable Assy, Bungee	1
35-524531-2 [4]	Indicator Actuating	1
MCNAS30425-0106	Rudder Aft LH	1
MCNAS30433-0247	Rudder Aft	1
MCNAS31414-1871	Rudder Fwd	2
MCNAS30422-0255	Aileron	1
MCNAS30426-0603	Aileron	1
MCNAS30466-0173	Aileron	
MC36-521011-1	Aileron	1
MC36-521011-3	Aileron	1
MC35-524314	Cable/Chain, Aileron	1
35-815109 [4]	Landing Gear Up Lock	1

Model 35 Bonanza
K35 [1],M35
S/N D-5728, D-5748 thru D-6561
Complete Kit P/N BCKT35-06

Part Number	Location	Qty
MCNAS30266-3506	Elevator Trim Tab	1
MCNAS30327-0581	Elevator Trim	1
MCNAS30327-0587	Elevator Trim	1
MCNAS30327-0597	Elevator Trim	1
MCNAS30327-0605	Elevator Trim	1
MCNAS30425-0082	Elevator Aft	1
MCNAS30436-0197	Elevator Aft	1
MC35-524382	Elevator Tab Aft	1
35-524030 [4]	Tab Drum	1
35-524383-4 [4]	Cable Assy, Bungee	1
35-524385-4 [4]	Elevator Control Fwd	1
35-524531-2 [4]	Indicator Actuating	1
MCNAS30425-0106	Rudder Aft LH	1
MCNAS30433-0247	Rudder Aft	1
MCNAS31414-1871	Rudder Fwd	2
MCNAS30422-0255	Aileron	1
MCNAS30426-0603	Aileron	1
MCNAS30466-0173	Aileron	

[1] Partial model eligibility
[2] Cable/Chain Assembly
[3] Pending FAA-PMA approval
[4] Not available from McFarlane

Kit continues on next page

Continued from previous page

Part Number	Location	Qty
MC36-521011-1	Aileron	1
MC36-521011-3	Aileron	1
MC35-524314	Cable/Chain, Aileron	1
35-815109[4]	Landing Gear Up Lock	1

[1] Partial model eligibility
[2] Cable/Chain Assembly
[3] Pending FAA-PMA approval
[4] Not available from McFarlane

Model 35 Bonanza
N35[1]
S/N D-0001 thru D-1500
Complete Kit P/N BCKT35-07

Part Number	Location	Qty
MCNAS30266-3506	Elevator Trim Tab	1
MCNAS30327-0581	Elevator Trim	1
MCNAS30327-0587	Elevator Trim	1
MCNAS30327-0597	Elevator Trim	1
MCNAS30327-0605	Elevator Trim	1
MCNAS30425-0082	Elevator Aft	1
MCNAS30435-2087	Elevator	1
MCNAS30436-0197	Elevator Aft	1
MC35-524382	Elevator Tab Aft	1
35-524000-3[4]	Elevator	1
35-524030[4]	Tab Drum	1
35-524383-4[4]	Cable Assy, Bungee	1
35-524531-2[4]	Indicator Actuating	1
MCNAS30425-0106	Rudder Aft LH	1
MCNAS30433-0247	Rudder Aft	1
MCNAS31414-1871	Rudder Fwd	2
MCNAS30422-0255	Aileron	1
MCNAS30426-0603	Aileron	1
MCNAS30466-0173	Aileron	1
MC36-521011-1	Aileron	1
MC36-521011-3	Aileron	1
MC35-524314	Cable/Chain, Aileron	1
35-815109[4]	Landing Gear Up Lock	1

Model 35 Bonanza
N35[1]
S/N D-6562 thru D-6841
Complete Kit P/N BCKT35-08

Part Number	Location	Qty
MCNAS30266-3506	Elevator Trim Tab	1
MCNAS30327-0581	Elevator Trim	1
MCNAS30327-0587	Elevator Trim	1
MCNAS30327-0597	Elevator Trim	1
MCNAS30327-0605	Elevator Trim	1
MCNAS30425-0082	Elevator Aft	1
MCNAS30435-2087	Elevator	1
MCNAS30436-0197	Elevator Aft	1
MC35-524382	Elevator Tab Aft	1
35-524000-3[4]	Elevator	1
35-524030[4]	Tab Drum	1
35-524383-4[4]	Cable Assy, Bungee	1
35-524531-2[4]	Indicator Actuating	1
MCNAS30425-0106	Rudder Aft LH	1
MCNAS30433-0247	Rudder Aft	1
MCNAS31414-1871	Rudder Fwd	2
MCNAS30422-0255	Aileron	1
MCNAS30426-0603	Aileron	1
MCNAS30466-0173	Aileron	1
MC36-521011-1	Aileron	1
MC36-521011-3	Aileron	1
MC35-524314	Cable/Chain, Aileron	1
35-815109[4]	Landing Gear Up Lock	1

Model 35 Bonanza
P35
S/N D-6842 thru D-7309, except D-7140
Complete Kit P/N BCKT35-09

Part Number	Location	Qty
MCNAS30266-3506	Elevator Trim Tab	1
MCNAS30327-0581	Elevator Trim	1
MCNAS30327-0587	Elevator Trim	1
MCNAS30327-0597	Elevator Trim	1
MCNAS30327-0605	Elevator Trim	1
MCNAS30425-0082	Elevator Aft	1
MCNAS30435-2087	Elevator	1
MCNAS30436-0197	Elevator Aft	1
MC35-524382	Elevator Tab Aft	1
MC35-524651-1	Elevator	1
35-524030[4]	Tab Drum	1
35-524383-4[4]	Cable Assy, Bungee	1
35-524647-9[4]	Indicator Actuating	1
MCNAS30425-0106	Rudder Aft LH	1
MCNAS30433-0247	Rudder Aft	1
MCNAS31414-1871	Rudder Fwd	2
MCNAS30422-0255	Aileron	1
MCNAS30426-0603	Aileron	1
MCNAS30466-0173	Aileron	1
MC36-521011-1	Aileron	1
MC36-521011-3	Aileron	1
MC35-524314	Cable/Chain, Aileron	1
35-815109[4]	Landing Gear Up Lock	1

Model 35 Bonanza
S35, V35, V35TC, V35A, & V35ATC
S/N D-7140 and D-7310 thru D-9068
Complete Kit P/N BCKT35-10

Part Number	Location	Qty
MCNAS30266-3950	Elevator Trim	1
MCNAS30327-0581	Elevator Trim	1
MCNAS30327-0587	Elevator Trim	1
MCNAS30327-0597	Elevator Trim	1
MCNAS30327-0605	Elevator Trim	1
MCNAS30425-0082	Elevator Aft	1
MCNAS30435-2087	Elevator	1
MCNAS30436-0197	Elevator Aft	1
MC1781-2	Elevator Trim	1ea
MC35-524382	Elevator Tab Aft	1
MC35-524651-1	Elevator	1
35-524383-4[4]	Cable Assy, Bungee	1
35-524647-9[4]	Indicator Actuating	1
MCNAS30425-0106	Rudder Aft LH	1
MCNAS30433-0247	Rudder Aft	1
MCNAS31514-1871	Rudder Fwd	2
MCNAS30422-0255	Aileron	1
MCNAS30426-0603	Aileron	1
MCNAS30466-0173	Aileron	
MC36-521011-1	Aileron	1
MC36-521011-3	Aileron	1
MC35-524314	Cable/Chain, Aileron	1
35-815109[4]	Landing Gear Up Lock	1

Model 35 Bonanza
V35B, & V35BTC
S/N D-9069 thru D-9999
Complete Kit P/N BCKT35-11

Part Number	Location	Qty
MCNAS30266-3954	Elevator Trim	1
MCNAS30277-1156	Elevator Trim	1
MCNAS30327-0581	Elevator Trim	1
MCNAS30327-0587	Elevator Trim	1
MCNAS30327-0597	Elevator Trim	1
MCNAS30327-0605	Elevator Trim	1
MCNAS30425-0082	Elevator Aft	1
MCNAS30435-2087	Elevator	1
MCNAS30436-0197	Elevator Aft	1
MC35-524382	Elevator Tab Aft	1
MC35-524651-1	Elevator	1
35-524383-4[4]	Cable Assy, Bungee	1
35-524647-9[4]	Indicator Actuating	1
MCNAS30425-0106	Rudder Aft LH	1
MCNAS30433-0247	Rudder Aft	1
MCNAS31514-1871	Rudder Fwd	2
MCNAS30422-0255	Aileron	1
MCNAS30426-0603	Aileron	1
MCNAS30466-0173	Aileron	
MC36-521011-1	Aileron	1
MC36-521011-3	Aileron	1
MC35-524314	Cable/Chain, Aileron	1
35-815109[4]	Landing Gear Up Lock	1

Model 35 Bonanza
P35
S/N D-6842 thru D-7309, except D-7140
Complete Kit P/N BCKT35-09

Part Number	Location	Qty
MCNAS30266-3506	Elevator Trim Tab	1
MCNAS30327-0581	Elevator Trim	1
MCNAS30327-0587	Elevator Trim	1
MCNAS30327-0597	Elevator Trim	1
MCNAS30327-0605	Elevator Trim	1
MCNAS30425-0082	Elevator Aft	1
MCNAS30435-2087	Elevator	1
MCNAS30436-0197	Elevator Aft	1
MC35-524382	Elevator Tab Aft	1
MC35-524651-1	Elevator	1
35-524030[4]	Tab Drum	1
35-524383-4[4]	Cable Assy, Bungee	1
35-524647-9[4]	Indicator Actuating	1
MCNAS30425-0106	Rudder Aft LH	1
MCNAS30433-0247	Rudder Aft	1
MCNAS31414-1871	Rudder Fwd	2
MCNAS30422-0255	Aileron	1
MCNAS30426-0603	Aileron	1
MCNAS30466-0173	Aileron	1
MC36-521011-1	Aileron	1
MC36-521011-3	Aileron	1
MC35-524314	Cable/Chain, Aileron	1
35-815109[4]	Landing Gear Up Lock	1

Model 36 Bonanza
36
S/N E-1 thru E-184
Complete Kit P/N BCKT36-01

MC36-524000-33[3]	Rudder, Aft, LH & RH	2
MCNAS30435-1425	Rudder Fwd	2
MC36-524000-23	Elevator Fwd	1
MC36-524000-29	Cable/Chain, Elevator Tab RH	1
MC36-524000-31	Cable/Chain, Elevator Tab LH	1

Kit continues in next column

Continued from previous column

Part Number	Location	Qty
MC36-524000-41[3]	Cable/Chain, Elevator	1
MCNAS30434-1624	Elevator Up	1
MCNAS30435-0564	Elevator	2
MCNAS31237-0534	Elevator Tab	2
35-524647-9[4]	Indicator Actuating	1
MC36-521011-1	Aileron	2
MC36-521011-3	Aileron	2
MCNAS30422-0255	Aileron	1
MCNAS30426-0703	Aileron LH	1
MCNAS30466-0173	Aileron	1
35-815109[4]	Landing Gear Up Lock	2
35-524139[4]	Chain Assy Single Cntr Wheel	1

Model 36 Bonanza
A36
S/N E-185 thru E-301
Complete Kit P/N BCKTA36-01

Part Number	Location	Qty
MCNAS30434-1624	Elevator Up	1
MCNAS30435-0564	Elevator	2
MCNAS31237-0534	Elevator Tab	2
MC36-524000-23	Elevator Fwd	1
MC36-524000-29	Cable/Chain, Elev. Tab RH	1
MC36-524000-31	Cable/Chain, Elev. Tab LH	1
MC36-524000-41[3]	Cable/Chain, Elev.	1
36-524647-9[4]	Indicator Actuating	1
MCNAS30435-1425	Rudder Fwd	2
MC36-524000-33[3]	Rudder Aft LH & RH	2
MCNAS30422-0255	Aileron	1
MCNAS30426-0703	Aileron LH	1
MCNAS30466-0173	Aileron	1
MC36-521011-1	Aileron	2
MC36-521011-3	Aileron	2
35-815109[4]	Landing Gear Up Lock	2
35-524139[4]	Chain Assy Single Cntr Wheel	1

Model 36 Bonanza
A36
S/N E-302 thru E-571
Complete Kit P/N BCKTA36-02

Part Number	Location	Qty
MCNAS30435-0564	Elevator	2
MCNAS31237-0534	Elevator Tab	2
MCNAS30434-1624	Elevator Up	1
MC36-524000-23	Elevator Fwd	1
MC36-524000-41[3]	Cable/Chain, Elevator	1
MC36-524000-31	Cable/Chain, Elevator Tab LH	1
MC36-524000-29	Cable/Chain, Elevator Tab RH	1
36-524647-9[4]	Indicator Actuating	1
MCNAS30435-1421	Rudder Fwd	2
MC36-524000-33[3]	Rudder Aft LH & RH	2
MCNAS30422-0255	Aileron	1
MCNAS30426-0703	Aileron LH	1
MCNAS30466-0173	Aileron	1
MC36-521011-1	Aileron	2
MC36-521011-3	Aileron	2

Model 36 Bonanza
A36
S/N E-572 thru E-925
Complete Kit P/N BCKTA36-03

Part Number	Location	Qty
MCNAS30434-1624	Elevator Up	1
MCNAS30435-0564	Elevator	2
MCNAS31237-0284	Elevator Tab	1
MCNAS31237-0520	Elevator Tab	1
MC36-524000-23	Elevator Fwd	1
MC36-524000-29	Cable/Chain Elev. Tab RH	1
MC36-524000-31	Cable/Chain, Elev. Tab LH	1
MC002-524028-9	Elevator Tab	1
MC45-526011-7	Chain	1
002-524028-1[4]	Cable Assy, Elev. Control	1
35-524647-9[4]	Indicator Actuating	1
MCNAS30435-1703	Rudder Fwd LH	1
MCNAS30435-1696	Rudder Fwd RH	1
MC002-524000-23	Rudder Control Aft	2
MC36-521011-1	Aileron	2
MC36-521011-3	Aileron	2
MCNAS30422-0255	Aileron	1
MCNAS30426-0703	Aileron LH	1
MCNAS30466-0173	Aileron	1

[1] Partial model eligibility
[2] Cable/Chain Assembly
[3] Pending FAA-PMA approval
[4] Not available from McFarlane

Flight Control System
Flight Control Cables - Beechcraft

Model 36 Bonanza
A36
S/N E-926 thru E-938
Complete Kit P/N BCKTA36-04

Part Number	Location	Qty
MCNAS30434-1624	Elevator Up	1
MCNAS30435-0564	Elevator	2
MCNAS31237-0284	Elevator Tab	1
MCNAS31237-0520	Elevator Tab	1
MC36-524000-23	Elevator Fwd	1
MC36-524000-29	Cable/Chain, Elev. Tab RH	1
MC36-524000-31	Cable/Chain, Elev. Tab LH	1
MC002-524028-9	Elevator Tab	1
MC45-526011-7	Chain	1
35-524647-9 [4]	Indicator Actuating	1
002-524028-1 [4]	Cable Assy, Elev. Control	1
MCNAS30435-1703	Rudder Fwd LH	1
MCNAS30435-1696	Rudder Fwd RH	1
MC002-524000-23	Rudder Control Aft	2
MCNAS30466-0173	Aileron	1
MCNAS30537-0647	Aileron	1
MCNAS30422-0255	Aileron Aft	1
MCNAS30537-0667	Aileron Fwd	1
MCNAS30426-1064	Aileron LH	1
MC35-524314-12	Cable/Chain, Aileron Fuslg.	1

Model 36 Bonanza
A36
S/N E-939 thru E14945, E-1947 thru E-2103,
E-2105 thru E-2110
Complete Kit P/N BCKTA36-05

Part Number	Location	Qty
MC002-524028-21	Cable/Chain, Elev. Tab	1
MC36-524000-23	Elevator Fwd	1
MC36-524000-29	Cable/Chain, Elev. Tab RH	1
MC36-524000-31	Cable/Chain, Elev. Tab LH	1
MCNAS30434-1624	Elevator Up	1
MCNAS30435-0564	Elevator	2
MCNAS31237-0204	Elevator Tab	1
MCNAS31237-0520	Elevator Tab	1
35-524647-9 [4]	Indicator Actuating	1
MCNAS30435-1696	Rudder Fwd RH	1
MC002-524000-23	Rudder Aft	2
MCNAS30435-1703	Rudder Fwd LH	1
MC35-524314-12	Cable/Chain, Aileron Fuslg.	1
MCNAS30422-0255	Aileron	1
MCNAS30426-1064	Aileron LH	1
MCNAS30537-0647	Aileron Aft	1
MCNAS30537-0667	Aileron Fwd	1
MCNAS30566-1035	Aileron	1

Model 36 Bonanza
A36
S/N E-1946, E-2104, E-2111 thru E-3629,
E-3631 thru E-3635
Complete Kit P/N BCKTA36-06

Part Number	Location	Qty
MC106-524020-57	Cable/Chain, Elevator Tab	1
MC106-524046-7	Elevator Tab Nose Down	1
MC106-524046-9	Elevator Tab Nose Up	1
MC106-524049-1	Elevator Up Fwd	1
MC106-524049-9	Elevator Down Fwd	1
MC106-524050-1	Elevator Up Aft	1
MC106-524050-3	Elevator Down Aft	1
MC36-524000-63	Cable/Chain, Elev. Tab RH	1
MC36-524000-69	Cable/Chain, Elev. Tab LH	1
MC106-524051-5	Rudder RH	1
MC106-524051-7	Rudder LH	1
MC36-524079-5 [3]	Rudder Aft RH	1
MC36-524079-7 [3]	Rudder Aft LH	1
MC106-524019-47	Cable/Chain, Aileron Tab	1
MC106-524044-19	Aileron	1
MC106-524044-21 [3]	Aileron	1
MC106-524044-3	Aileron	1
MC106-524045-5	Aileron	1
MC106-524031-1	Cable/Chain Aileron Tab	1
MC106-524043-11	Aileron Aft LH	1
MC106-524043-5	Aileron Aft RH	1
MC106-524043-7	Aileron Fwd LH & RH	1

Model 36 Bonanza
A36TC
S/N EA-001 thru EA-241 & EA-243 thru EA-272
Complete Kit P/N BCKT36TC-01

Part Number	Location	Qty
MC002-524028-21	Cable/Chain, Elev. Tab	1
MC36-524000-23	Elevator Fwd	1
MC36-524000-29	Cable/Chain, Elev. Tab RH	1
MC36-524000-31	Cable/Chain, Elev. Tab LH	1
MCNAS30434-1624	Elevator Up	1
MCNAS30435-0564	Elevator	2
MCNAS31237-0204	Elevator Tab	1
MCNAS31237-0520	Elevator Tab	1
35-524647-9 [4]	Indicator Actuating	1
MC002-524000-23	Rudder Aft	2
MCNAS30435-1696	Rudder Fwd RH	1
MCNAS30435-1703	Rudder Fwd LH	1

Kit continues in next column

Continued from previous column

Part Number	Location	Qty
MC35-524314-12	Cable/Chain, Aileron Fuslg.	1
MCNAS30422-0255	Aileron	1
MCNAS30426-1064	Aileron LH	1
MCNAS30537-0647	Aileron Aft	1
MCNAS30537-0667	Aileron Fwd	1
MCNAS30566-1035	Aileron	1
35-815109 [4]	Main Gear Up Lock	1

Model 36 Bonanza
B36TC
S/N EA-242, EA-273 thru EA-319 & EA-321 thru EA-388
Complete Kit P/N BCKT36TC-02

Part Number	Location	Qty
MC002-524028-21	Cable/Chain, Elev. Tab	1
MC36-524000-23	Elevator Fwd	1
MC36-524000-29	Cable/Chain, Elev. Tab RH	1
MC36-524000-31	Cable/Chain, Elev. Tab LH	1
MCNAS30434-1624	Elevator Up	1
MCNAS30435-0564	Elevator	2
MCNAS31237-0204	Elevator Tab	1
35-524647-9 [4]	Indicator Actuating	1
MC002-524000-23	Rudder Aft	2
MCNAS30435-1696	Rudder Fwd RH	1
MCNAS30435-1703	Rudder Fwd LH	1
MC35-524314-12	Cable/Chain, Aileron Fuslg.	1
MCNAS30422-0255	Aileron	1
MCNAS30426-1064	Aileron LH	1
MCNAS30537-0647	Aileron Aft	1
MCNAS30537-0667	Aileron Fwd	1
MCNAS30566-1035	Aileron	1
35-815109 [4]	Main Gear Up Lock	1

Model 36 Bonanza
B36TC
S/N EA-320, EA-378 thru EA-999
Complete Kit P/N BCKT36TC-03

Part Number	Location	Qty
MC106-524020-57	Cable/Chain, Elevator Tab	1
MC106-524046-7	Elevator Tab Nose Down	1
MC106-524046-9	Elevator Tab Nose Up	1
MC106-524049-1	Elevator Up Fwd	1
MC106-524049-9	Elevator Down Fwd	1
MC106-524050-1	Elevator Up Aft	1
MC106-524050-3	Elevator Down Aft	1
MC36-524000-63	Cable/Chain, Elev. Tab RH	1
MC36-524000-69	Cable/Chain, Elev. Tab LH	1
MC106-524051-5	Rudder RH	1
MC106-524051-7	Rudder LH	1
MC36-524079-5 [3]	Rudder Aft RH	1
MC36-524079-7 [3]	Rudder Aft LH	1
MC106-524019-47	Cable/Chain, Aileron Tab	1
MC106-524031-1	Cable/Chain, Aileron Tab	1
MC106-524043-11	Aileron Aft LH	1
MC106-524043-5	Aileron Aft RH	1
MC106-524044-19	Aileron	1
MC106-524044-21 [3]	Aileron	1
MC106-524044-3	Aileron	1
MC106-524045-5	Aileron	1
35-815109 [4]	Main Gear Up Lock	1

Model 36 Bonanza
G36
S/N E-3630, E-3636 thru-9999
Complete Kit P/N BCKTG36-01

Part Number	Location	Qty
MC36-524000-63	Cable/Chain, Elevator Tab RH	1
MC106-524049-9	Elevator Down Fwd	1
MC106-524046-7	Elevator Tab Nose Down	1
MC106-524049-1	Elevator Up Fwd	1
MC36-524000-69	Cable/Chain, Elevator Tab LH	1
MC106-524046-9	Elevator Tab Nose Up	1
MC106-524050-1	Elevator Up Aft	1
MC106-524020-57	Cable/Chain, Elevator Tab	1
MC106-524050-3	Elevator Down Aft	1
MC36-524079-5 [3]	Rudder Aft RH	1
MC36-524079-7 [3]	Rudder Aft LH	1
MC106-524051-7	Rudder LH	1
MC106-524051-5	Rudder RH	1
MC106-524043-7	Aileron Fwd LH & RH	1
MC106-524045-5	Aileron	1
MC106-524044-3	Aileron	1
MC106-524019-47	Cable/Chain, Aileron Tab	1
MC106-524031-1	Cable/Chain, Aileron Tab	1
MC106-524044-19	Aileron	1
MC106-524043-5	Aileron Aft RH	1
MC106-524043-11	Aileron Aft LH	1
MC106-524044-21 [3]	Cable Assy	1
35-815109 [4]	Landing Gear Up Lock	2

Model 50 Twin Bonanza
D50 [1] (DH-144 thru DH-154),D50B,D50C,D50E,
E50,F50,H50,J50,G50 [1] (GH-95 thru GH-119)

Part Number	Location
MCNAS30635-1172	Aileron

Model 55
95-55,95-A55

Part Number	Location
MCNAS30435-0564	Elevator
MCNAS30444-3507	Elevator
MCNAS30534-0652	Aileron Fwd
MCNAS30534-1594	Rudder Fwd RH
MCNAS30534-1600	Rudder Fwd LH
MCNAS305-35-0672	Cable
MCNAS30555-1043	Aileron
MCNAS31237-0302	Elevator Tab Down
MCNAS31237-0323	Elevator Tab Up

Model 55
95-B55

Part Number	Location	
MCNAS30277-4040	Rudder Tab	Note 1
MCNAS30435-0564	Elevator	Note 2
MCNAS30435-0568	Elevator Aft	Note 3
MCNAS30435-0570	Elevator Aft	Note 4
MCNAS30444-3507	Elevator	Note 5
MCNAS30534-0652	Aileron Fwd	
MCNAS30534-1594	Rudder Fwd RH	
MCNAS30534-1600	Rudder Fwd LH	
MCNAS305-35-0672	Cable	
MCNAS30555-1043	Aileron	
MCNAS31237-0222	Elevator Trim	Note 6
MCNAS31237-0302	Elevator Tab Down	Note 7
MCNAS31237-0323	Elevator Tab Up	

Note 1: TC-1608 thru TC-2456
Note 2: TC-371 thru TC-2404
Note 3: TC-2405 thru TC-2430
Note 4: TC-2431 thru TC-2456
Note 5: TC-371 thru TC-1607
Note 6: TC-2024 thru TC-2456
Note 7: TC-371 thru TC-2023

Model 55
95-C55

Part Number	Location	
MCNAS30435-0564	Elevator	Note 1
MCNAS30444-3511	Elevator	
MCNAS30534-0652	Aileron Fwd	Note 1
MCNAS30534-1594	Rudder Fwd RH	Note 1
MCNAS30534-1600	Rudder Fwd LH	Note 1
MCNAS305-35-0672	Cable	Note 1
MCNAS30555-1043	Aileron	
MCNAS31237-0302	Elevator Tab Down	
MCNAS31237-0323	Elevator Tab Up	

Note 1: Not required for s/n TC-350.

Model 55
D55

Part Number	Location	
MCNAS30435-0564	Elevator	
MCNAS30444-3511	Elevator	
MCNAS30534-0652	Aileron Fwd	
MCNAS305-35-0672	Cable	
MCNAS30534-1594	Rudder Fwd RH	
MCNAS30534-1600	Rudder Fwd LH	
MCNAS30555-1043	Aileron	
MCNAS31237-0302	Elevator Tab Down	
MCNAS31237-0323	Elevator Tab Up	
MCNAS31237-0843	Electric Trim	Note 1

Note 1: TE-633 thru TE-76

Model 55
E55

Part Number	Location	
MCNAS30277-4040	Rudder Tab	Note 1
MCNAS30435-0564	Elevator	Note 2
MCNAS30435-0568	Elevator Aft	Note 3
MCNAS30435-0570	Elevator Aft	Note 4
MCNAS30444-3511	Elevator	Note 5
MCNAS30534-0652	Aileron Fwd	
MCNAS30534-1594	Rudder Fwd RH	
MCNAS30534-1600	Rudder Fwd LH	
MCNAS305-35-0672	Cable	
MCNAS30555-1043	Aileron	
MCNAS31237-0222	Elevator Trim	Note 6
MCNAS31237-0302	Elevator Tab Down	Note 7
MCNAS31237-0323	Elevator Tab Up	
MCNAS31237-0843	Electric Trim	

Note 1: TE-938, TE-943 thru TE-1201
Note 2: TE-768 thru TE-1192
Note 3: TE-1193 thru TE-1196
Note 4: TE-1197 thru TE-1201
Note 5: TE-768 thru TE-937, TE-939 thru TE-942
Note 6: TE-1087 thru TE-1201
Note 7: TE-768 thru TE-1086

[1] Partial model eligibility
[2] Cable/Chain Assembly
[3] Pending FAA-PMA approval
[4] Not available from McFarlane

McFarlane
FAA-PMA Approved

Model 56 Baron
56TC,A56TC

Part Number	Location
MCNAS30277-4040	Rudder Tab
MCNAS30435-0564	Elevator
MCNAS30534-0652	Aileron Fwd
MCNAS305-35-0672	Cable
MCNAS30555-1043	Aileron
MCNAS31237-0302	Elevator Tab Down
MCNAS31237-0342	Elevator Tab Up

Model 58 Baron
58

Part Number	Location	
MC106-524049-1	Elevator Up Fwd	Note 1
MC106-524049-9	Elevator Down Fwd	Note 1
MC106-524050-1	Elevator Up Aft	Note 1
MC106-524050-3	Elevator Down Aft	Note 1
MCNAS30277-4240	Rudder Tab	Note 2
MCNAS30435-0564	Elevator	Note 3
MCNAS30435-0568	Elevator Aft	Note 4
MCNAS30435-0570	Elevator Aft	Note 5
MCNAS30534-0652	Aileron Fwd	Note 2
MCNAS30534-1696	Rudder RH	Note 2
MCNAS30534-1703	Rudder LH	Note 2
MCNAS305-35-0672	Cable	Note 2
MCNAS30555-1043	Aileron	Note 2
MCNAS31237-0222	Elevator Trim	Note 6
MCNAS31237-0302	Elevator Tab Down	Note 7
MCNAS31237-0523	Elevator Trim Up	Note 2
MCNAS31237-0843	Electric Trim	

Note 1: TH-1389, TH-1396 thru TH-2124
Note 2: TH-1 thru TH-1388, TH-1390 thru TH-1395
Note 3: TH-1 thru TH-1274
Note 4: TH-1275 thru TH-1314
Note 5: TH-1315 thru TH-1388, TH-1390 thru TH-1395
Note 6: TH-790 thru TH-1388, TH-1390 thru TH-1395
Note 7: TH-1 thru TH-789

Model 58 Baron
58P

Part Number	Location	
MC106-524049-1	Elevator Up Fwd	Note 1
MC106-524049-9	Elevator Down Fwd	Note 1
MCNAS30435-0564	Elevator	Note 2
MCNAS30534-1696	Rudder RH	Note 2
MCNAS30534-1703	Rudder LH	Note 2
MCNAS30555-1043	Aileron	Note 2

Note 1: TJ-436, TJ-444 thru TJ-497
Note 2: TJ-3 thru TJ-435, TJ-437 thru TJ-443
1 Partial model eligibility
2 Cable/Chain Assembly

Model 58 Baron
58TC

Part Number	Location	
MC106-524049-1	Elevator Up Fwd	Note 1
MC106-524049-9	Elevator Down Fwd	Note 1
MCNAS30277-4240	Rudder Tab	Note 2
MCNAS30435-0564	Elevator	Note 3
MCNAS30534-1696	Rudder RH	Note 3
MCNAS30534-1703	Rudder LH	Note 4
MCNAS30555-1043	Aileron	Note 4

Note 1: TK-147, TK-151 Note 2: TK-53 thru TK-146, TK-148 thru TK-150 Note 3: Not required for s/n TK-151.
Note 4: Not required for s/n TK-147 or TK-151.

Model 60 Duke
B60

MCNAS30534-0652	Aileron Fwd
MCNAS305-35-0672	Cable

Model 76 Duchess
76

MCNAS31424-1152	Stabilator
MCNAS31424-1242	Rudder Fwd RH
MCNAS31425-1220	Rudder Fwd LH
MCNAS31425-1411	Stabilator/Elevator Fwd

Model 90 King Air
65-90,65-A90,C90,C90A, C90B1(LJ-1288 thru LJ-1305, LJ-1307 thru LJ-1315, LJ-1317, LJ-1319, LJ-1367 thru LJ-1755),C90GT,E90

MCNAS30635-1172 Aileron

Model 90 King Air
F90

Part Number	Location
MCNAS30266-1814	Elevator Tab
MCNAS30277-1700	Elevator Tab
MCNAS30635-1172	Aileron

Model 100 King Air
100,A100,B100

Part Number	Location
MC99-524015	Aileron Tab
MCNAS30635-1172	Aileron

Model 200 King Air
200,200C,200CT,200T(All except BT-28), B200, B200C,B200CT,B200T

Part Number	Location	
MC101-524088-1	Aileron Tab	
MC1781-1	Elevator Tab	Note 1,2
MCNAS30266-1814	Elevator Tab	
MCNAS30277-1700	Elevator Tab	Note 2
MCNAS30635-1172	Aileron	

Note 1: Replaces: (1) NAS302-67-6643 (2) 35-524288 Stop Screw, (2) 35-524287 Stop Nut.
Note 2: Model 200 s/n BB-39 thru BB-912.

Model 300 King Air
300,300LW

Part Number	Location
MCNAS30266-1814	Elevator Tab
MCNAS30267-6643	Elevator Tab
MCNAS30277-1700	Elevator Tab
MCNAS30624-1176	Aileron
MCNAS30635-1172	Aileron

Model 300 King Air
B300,B300C1(All except FN-1)

Part Number	Location
MC101-524088-1	Aileron Tab
MCNAS30266-1814	Elevator Tab
MCNAS30277-1700	Elevator Tab
MCNAS30624-1176	Aileron
MCNAS30635-1172	Aileron

Model 1900 Airliner
1900,1900C1(UB-1 thru UB-74)

Part Number	Location
MCNAS30266-1312	Elevator Tab
MCNAS30277-1307	Elevator
MCNAS30624-1176	Aileron
MCNAS30635-1172	Aileron

Model 45 and T-34
A45 (T-34A), D45 (T-34B)

Part Number	Location	
MCNAS305-34-0640	Aileron	
MCNAS305-35-0672	Aileron	
MCNAS305-25-0546	Aileron	
MCNAS305-35-0546	Aileron	
MCNAS305-24-0514	Aileron	
MCNAS305-34-0514	Aileron	
MCNAS305-34-0826	Elevator	Note 2
MCNAS305-35-0576	Elevator	
MCNAS305-34-0996	Elevator	Note 2
MCNAS305-35-0564	Elevator Aft	
MCNAS305-34-1010	Elevator Fwd	Note 1
MCNAS305-34-0840	Elevator Fwd	Note 1
MCNAS304-34-1271	Rudder	
MCNAS304-35-0712	Rudder	
MCNAS304-33-0311	Rudder	Note 3
MCNAS304-34-1116	Rudder	Note 3

Note 1: For model A45 (T-34A) only.
Note 2: For model D45 (T-34B) only.
Note 3: For aircraft with Beechcraft Kit 45-322A installed.

Model T-34
T-34C, 34C, T-34C-1

Part Number	Location	
MCNAS305-34-0640	Aileron	
MCNAS305-35-0672	Aileron	
MCNAS305-25-0546	Aileron	Note 1
MCNAS305-35-0546	Aileron	Note 1
MCNAS305-24-0514	Aileron	Note 1
MCNAS305-34-0514	Aileron	Note 1
MC104-524023-3	Aileron Trim	
MC104-524023-5	Aileron Trim	
MCNAS305-35-0996	Elevator	
MCNAS305-34-0826	Elevator	
MCNAS305-34-0564	Elevator	
MCNAS305-35-0576	Elevator	
MC104-524020-9	Elevator Trim	
MC104-524020-11	Elevator Trim	
MC104-524046-3	Elevator Trim	
MC104-524046-5	Elevator Trim	
MC104-524021-3	Rudder Trim	
MC104-524021-5	Rudder Trim	
MC104-524022-3	Rudder Trim	
MC104-524022-7	Rudder Trim	

Note 1: For model T-34C only.

General Beechcraft Cable Notes: Corrosion Protection

All Beechcraft cables are made from galvanized steel cable and coated with a modified MIL-PRF-16173 compound. This is the same process used on Beechcraft original cables. It provides additional corrosion protection beyond the standard MIL-SPEC rust preventive oil. This provides both exceptional wear resistance and corrosion protection for many years.

Cable Stop P/N MC6057

- Improved for more consistent holding strength.
- Used on the assist step cable on 35, A35 and C35 Beech Bonanzas.
- One McFarlane MC6057 cable stop replaces both Beechcraft 35-524287 nut and 35-524288 screw part numbers.
- Also included on select cable assemblies as required.

Bulk Cable

Great prices on galvanized or stainless steel!
All cable meets MIL-DTL-83420 certification. Manufacturer certification is provided with every order.

- Direct mill purchases let us sell for less!
- Prepackaged in 100 and 500 foot lengths.
- Custom lengths available.

Diameter	Cable	Galvanized	Stainless
1/16	1X19	•	
	7X7	•	•
	7X19	•	•
1/8	1X19	•	
	7X19	•	•
1/4	7X19	•	•
3/32	1X19	•	
	7X7	•	•
	7X19	•	•
3/16	7X19		•
3/8	7X19	•	•
5/32	7X19	•	•
5/16	7X19	•	•

Hardware

Over 100 certified aircraft control cable hardware part numbers in STOCK at discounted prices!!

Balls, BM Series
Balls, Single Shank, MS20664 Series
Balls, Double Shank, MS20663 Series
Barrels, Brass, MS21251 Series
Bushings, AN111 Series
Locking Clips, MS21256 Series
Shackles, AN115 Series
Sleeves, Tin and Zinc, MS51844 Series
Straps, Eye and Fork NAS1435 Series
Terminals, Eye, MS20668 Series
Terminals, Fork, MS20667 Series
Terminals, Stud, MS21259 Series
Terminals, Turnbuckle MS21260 Series
Thimbles, AN100 Series
Turnbuckles, Clevis End, MS21252 Series
Turnbuckles, Eye end for Pin, MS21254 Series
Turnbuckles, Eye end for wire rope, MS21255 Series
Special Terminals

McFarlane now manufactures NAS1435 and DOD QPL-781 qualified terminals

Rudder Pedals for Cessna Aircraft

Completely New Rudder Pedal P/N AP2000-01

- Less money and longer life!
- Bronze bushings at the pivot points resist wear and vibration for longer pedal life.
- Precision cast heat treated aluminum alloy.
- Powder coat finish for durability and corrosion protection.
- FAA-PMA direct replacement for Cessna P/N1460320-1.

Bronze bushings for a longer life!

Manufactured by Alexander Productions

Rudder Pedal Bar

Avoid risk of costly damage during assembly

P/N AD1260558-1 (LH)
P/N AD1260558-2 (RH)

Each bar includes 2 ea. P/N S1003-43A bearings and 1 ea. P/N 1260419-1 tube pre-assembled. This avoids damage commonly caused while pressing the bearings during installation.

FAA-PMA

P/N AD1260558-1

P/N AD1260558-2

Aircraft Model	Part Number AD1260558-1	Part Number AD1260558-2
210-5 (205), 210-5A (205A)	•	•
206, U206G, TU206G	•	•
206H, T206H	•	•
207A, T207A	•	•
210M,N,R, T210M,N,R, P210	•	

Rudder Pedal Shaft

P/N AD0411778-2

FAA-PMA

Half of Cessna Price!

Aircraft Model
140A
150, 150A, F150, FA150
152, A152, F152, FA152
170, 170A,B
172, 172A,B,C,D,E,F,G,H,I,J,K,L,M,N,P
F172D,E,F,G,H,I,J,K,L,M,N,P
172RG, P172, R172E,F,G,H,K, FP172, FR172
175, 175A,B
180, 180A,B,C,D,E,F,G,H,J,K
182, 182A,B,C,D,E,F,G,H,J,K,L,M,N,P,Q,R
A182, F182, FR182, R182, TR182
185, 185A,B,C,D,E, A185E,F
190, 190A, 195, 195A,B
210-5 (205), 210-5A (205A)
206, U206, U206A,B,C,D,E
P206, P206A,B,C,D,E
207, T207
210, 210A,B,C,D,E,F,G,H,J,K, T210G,H,J

Aileron Bellcrank Bushing

P/N MC0422280

- Use on all single engine Cessna
- High strength alloy steel
- Replace when replacing aileron cables
- 4 each included in all applicable Cessna cable kits

Custom Fabricated Cables

DOD certified custom cable assemblies can be fabricated to specification MIL-DTL-6117, or certified to your special specifications.

- Pre-stretched and proof loaded to MIL-DTL-5688.
- Manufactured using the same materials and attention to quality as our FAA-PMA products. We cannot provide FAA-PMA approval for custom cables.
- Pricing is based on material usage determined upon receipt of specifications or a pattern. Our sales team can provide a quote at that time.
- One to three day service for most orders.
- We are a DOD QML-6117 certified cable supplier

Download custom forms at http://www.mcfarlaneaviation.com/services or call to have one faxed.

Parking Brake Cables for Cessna Aircraft

Don't forget to replace worn out parking brake cables!

Locate your make, model and serial number on the previous pages to find the correct part number for your aircraft.

McFarlane

FAA-PMA Approved

Control Yoke Universal Joint with Protective Sleeve for Cessna Aircraft

Save over 35%

P/N MC0411257

- Eliminates slack for precise and responsive control.
- Replace worn or corroded joints.
- Available separately or in a convenient kit including nuts and bolts.

Model
P/Ns MC0411257 and UJC-KT-2 are applicable to each aircraft model listed below
120, 140, 140A
150
150A,B,C,D,E,F,G,H,J,K,L,M
A150K,L,M,
F150F,G,H,J,K,L,M
FA150K,L,M, FRA150L,M
152, A152, F152, FA152
170, 170A,B,
172, 172A,B,C,D, F172D, FP172, P172D
172E,F,G,H,I,J,K,L,M,N,P,Q,R,S, T-41A
172RG, F172E,F,G,H,I,J,K,L,M,N,P
FR172E,F,G,H,I,J,K, R172K
R172E,F,G,H
175, 175A,B,C
180, 180A,B,C,D,E,F,G,H,J,K
182, 182A,B,C,D
185, 185A,B,C,D,E, A185E,F
210, 210A

Protective sleeve now included with every universal joint!

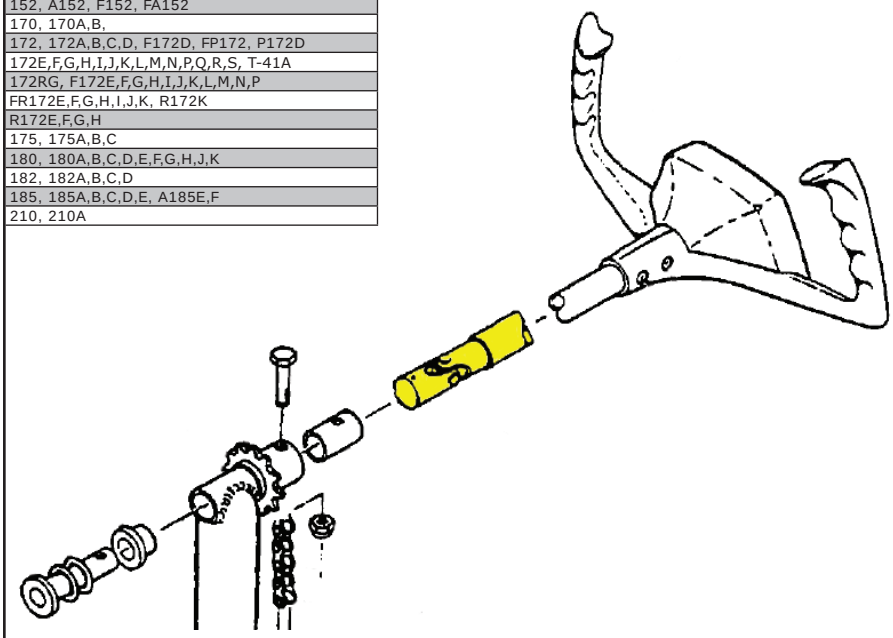

P/N MC0411257
Universal joint with protective sleeve

P/N UJC-KT-2
Universal joint with protective sleeve and attaching hardware

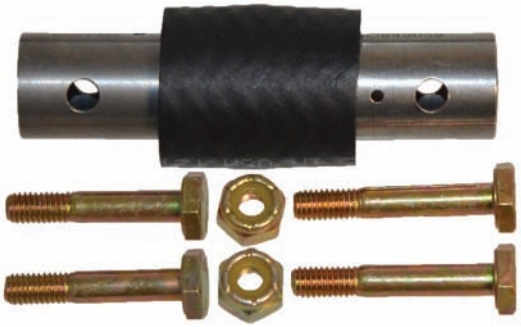

Kit P/N	Qty	Component	Description
UJC-KT-2	2	AN3-10A	Bolt
	2	AN3-11A	Bolt
	1	MC0411257	Universal Joint (w/sleeve P/N MC6183)
	2	MS21044N3	Nut

Aileron Gap Kit for Cessna Aircraft

Increase performance and safety!

P/N 115-100

Aircraft Development FAA-PMA/STC approved aileron gap seal kit includes aluminum strips to minimize air leakage between the rear wing spar and the aileron. Unlike most kits, this kit seals both the upper and lower gap for maximum aerodynamic effectiveness and efficiency. *This kit isn't a STOL kit, and don't expect miracles with any one of these improvements. However, the improvements are real and when all combined together result in a substantial improvement to your aircraft.*

Increase Performance:

- Reduced drag
- Increased lift
- Increased cruise speed
- Reduced stall speed
- Higher rate-of-climb
- Increased aileron authority
- Increased range (better fuel efficiency)

Increase Safety:

- Better spin resistance
- More aileron authority for crosswinds
- Reduced take-off and landing distances

Model
150 150A,B,C,D,E,F,G,H,J,K,L,M, A150K,L,M
152, A152
170B
172, 172A,B,C,D,E,F,G,H,J,K,L,M,N,P,Q,R,S
172RG, P172D, R172E,F,G,H,J,K
175, 175A,B,C
180, 180A,B,C,D,E,F,G,H,J,K
182, 182A,B,C,D,E,F,G,H,J,K,L,M,N,P,Q,R,S,T, T182, R182, TR182, T182T
185, 185A,B,C,D,E, A185E,F
210-5 (205), 210-5A (205A)
210, 210A,B,C

P/N 115-100

Aileron with *no* seal
High drag gap area and leak path from high pressure underside of wing to low pressure top side of wing.

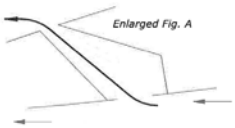

Aileron *with* seal
Gap seals reduce drag and air leaks.

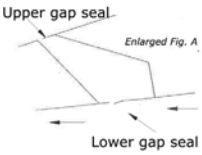

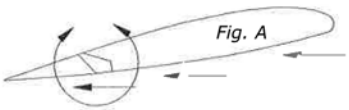

Optional hardware kit includes enough rivets to install the aileron gap kit.
P/N 115H

Manufactured by Aircraft Development

Control Yoke Universal Joint Kits for Piper Aircraft
Helps comply with AD 2010-15-10

Save over 60% off Piper price. Just our reamer saves you $100 !!

- Individual parts also available separately.
- Hardened stainless steel - Nitrided wear surfaces
- Eliminates free motion for precise and responsive control.
- Replace worn or corroded joints.

AD 2010-15-10 and Piper service bulletin 1197C requires inspection of the connection between the control yoke u-joint and the shaft on the forward (engine) end of the joint. This inspection is a convenient time to replace worn out u-joints. McFarlane has kits including the u-joint, shaft, taper pins, taper reamer, drill bit and other hardware to help comply with this AD, all at a fraction of the cost of buying the parts from Piper.

Universal Joint Kits for Piper Aircraft

Model	Serial Number	Left (Pilot)	Right (Copilot)
PA-28-140 [1]	28-20001 thru 28-20160	UJP-KT-3 or 3T	UJP-KT-5 or 5T
	28-20161 thru 28-21845	UJP-KT-4 or 4T	UJP-KT-5 or 5T
	28-21846 thru 28-21930	UJP-KT-1 or 1T	UJP-KT-2 or 2T
	28-21931 thru 28-21934	UJP-KT-4 or 4T	UJP-KT-5 or 5T
	28-21935 thru 28-25400	UJP-KT-1 or 1T	UJP-KT-2 or 2T
	28-25401 thru 28-7725290	UJP-KT-2 or 2T	UJP-KT-2 or 2T
PA-28-150 [1]	28-1 thru 28-1760, 28-03, 28-1760A	UJP-KT-3 or 3T	UJP-KT-5 or 5T
	28-1761 thru 28-3377	UJP-KT-4 or 4T	UJP-KT-5 or 5T
	28-3378 thru 28-4377	UJP-KT-1 or 1T	UJP-KT-2 or 2T
PA-28-151	All	UJP-KT-2 or 2T	UJP-KT-2 or 2T
PA-28-160 [1]	28-1 thru 28-1760, 28-03, 28-1760A	UJP-KT-3 or 3T	UJP-KT-5 or 5T
	28-1761 thru 28-3377	UJP-KT-4 or 4T	UJP-KT-5 or 5T
	28-3378 thru 28-4377	UJP-KT-1 or 1T	UJP-KT-2 or 2T
PA-28-161	All	UJP-KT-2 or 2T	UJP-KT-2 or 2T
PA-28-180 [1]	28-671 thru 28-1760, 28-03	UJP-KT-3 or 3T	UJP-KT-5 or 5T
	28-1761 thru 28-3377	UJP-KT-4 or 4T	UJP-KT-5 or 5T
	28-3378 thru 28-4377	UJP-KT-1 or 1T	UJP-KT-2 or 2T
	28-4378 thru 28-7505260, 28-E13	UJP-KT-2 or 2T	UJP-KT-2 or 2T
PA-28-181	All	UJP-KT-2 or 2T	UJP-KT-2 or 2T
PA-28-201T	All	UJP-KT-2 or 2T	UJP-KT-2 or 2T
PA-28-235 [1]	28-10001 thru 28-10486	UJP-KT-3 or 3T	UJP-KT-5 or 5T
	28-10487 thru 28-10719	UJP-KT-4 or 4T	UJP-KT-5 or 5T
	28-10720 thru 28-11039	UJP-KT-1 or 1T	UJP-KT-2 or 2T
	28-11040 thru 28-7710089, 28E-11	UJP-KT-2 or 2T	UJP-KT-2 or 2T
PA-28-236	All	UJP-KT-2 or 2T	UJP-KT-2 or 2T
PA-28R-180	All	UJP-KT-2 or 2T	UJP-KT-2 or 2T
PA-28R-200,201	All	UJP-KT-2 or 2T	UJP-KT-2 or 2T
PA-28R-201T	All	UJP-KT-2 or 2T	UJP-KT-2 or 2T
PA-28RT-201	All	UJP-KT-2 or 2T	UJP-KT-2 or 2T
PA-28RT-201T	All	UJP-KT-2 or 2T	UJP-KT-2 or 2T
PA-28S-160 [1]	28-1 thru 28-1760, 28-1760A	UJP-KT-3 or 3T	UJP-KT-5 or 5T
PA-28S-180 [1]	28-671 thru 28-1760	UJP-KT-3 or 3T	UJP-KT-5 or 5T
	28-1761 thru 28-3377	UJP-KT-4 or 4T	UJP-KT-5 or 5T
	28-3378 thru 28-4377	UJP-KT-1 or 1T	UJP-KT-2 or 2T
	28-4378 thru 28-7105234	UJP-KT-2 or 2T	UJP-KT-2 or 2T
PA-32-260 [1]	32-1 thru 32-600, 32-03, 32-04	UJP-KT-4 or 4T	UJP-KT-5 or 5T
	32-601 thru 32-690	UJP-KT-1 or 1T	UJP-KT-2 or 2T
	32-691 thru 32-7800008	UJP-KT-2 or 2T	UJP-KT-2 or 2T
PA-32-300 [1]	32-15, 32-21	UJP-KT-4 or 4T	UJP-KT-5 or 5T
	32-40000 thru 32-40415	UJP-KT-1 or 1T	UJP-KT-2 or 2T
	32-40416 thru 32-7940290	UJP-KT-2 or 2T	UJP-KT-2 or 2T
PA-32-301	All	UJP-KT-2 or 2T	UJP-KT-2 or 2T
PA-32-301T	All	UJP-KT-2 or 2T	UJP-KT-2 or 2T
PA-32R-300	All	UJP-KT-2 or 2T	UJP-KT-2 or 2T
PA-32R-301,301T	All	UJP-KT-2 or 2T	UJP-KT-2 or 2T
PA-32RT-300	All	UJP-KT-2 or 2T	UJP-KT-2 or 2T
PA-32RT-300T	All	UJP-KT-2 or 2T	UJP-KT-2 or 2T
PA-32S-300 [1]	32S-15	UJP-KT-4 or 4T	UJP-KT-5 or 5T
	32S-40000 thru 32S-40415	UJP-KT-1 or 1T	UJP-KT-2 or 2T
	32S-40416 thru 32S-7240137	UJP-KT-2 or 2T	UJP-KT-2 or 2T
PA-34-200,200T	All	UJP-KT-2 or 2T	UJP-KT-2 or 2T
PA-34-220T	All	UJP-KT-2 or 2T	UJP-KT-2 or 2T
PA-44-180,180T	All	UJP-KT-2 or 2T	UJP-KT-2 or 2T

[1] Partial model eligibility

Part Number	Description	Qty
UJP-KT-1		
CA62834-802SS	Universal Joint	1
62716-006	Shaft	1
AN386-1-6A	Taper Pin	2
NAS1149F0363P	Washer	2
AN975-3	Washer	2
404-526	Nut	2
404-156	Nut	2
UJP-KT-1T		
UJP-KT-1	See above	1
6532	Taper Reamer	1
6533	#5 Drill Bit	1
UJP-KT-2		
CA62834-802SS	Universal Joint	1
62716-007	Shaft	1
AN386-1-6A	Taper Pin	2
NAS1149F0363P	Washer	2
AN975-3	Washer	2
404-526	Nut	2
404-156	Nut	2
UJP-KT-2T		
UJP-KT-2	See above	1
6532	Taper Reamer	1
6533	#5 Drill Bit	1
UJP-KT-3		
CA62834-000SS	Universal Joint	1
62716-002	Shaft	1
AN386-1-6A	Taper Pin	2
NAS1149F0363P	Washer	2
AN975-3	Washer	2
404-526	Nut	2
404-156	Nut	2
UJP-KT-3T		
UJP-KT-3	See above	1
6532	Taper Reamer	1
6533	#5 Drill Bit	1

Part Number	Description	Qty
UJP-KT-4		
CA62834-000SS	Universal Joint	1
62716-004	Shaft	1
AN386-1-6A	Taper Pin	2
NAS1149F0363P	Washer	2
AN975-3	Washer	2
404-526	Nut	2
404-156	Nut	2
UJP-KT-4T		
UJP-KT-4	See above	1
6532	Taper Reamer	1
6533	#5 Drill Bit	1
UJP-KT-5		
CA62834-000SS	Universal Joint	1
62716-007	Shaft	1
AN386-1-6A	Taper Pin	2
NAS1149F0363P	Washer	2
AN975-3	Washer	2
404-526	Nut	2
404-156	Nut	2
UJP-KT-5T		
UJP-KT-5	See above	1
6532	Taper Reamer	1
6533	#5 Drill Bit	1

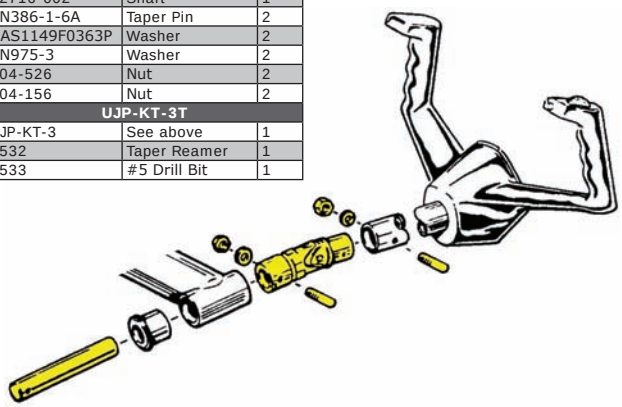

New! Universal Joints
Now stainless steel for longer life

Contact McFarlane Aviation to have your replacement U-joint, P/N CA62834-802SS precision match drilled and avoid having to re-rig the control system.

Maintenance Tip:

How do I know if my universal joint needs to be replaced?

A universal joint attaches to each control yoke shaft behind the instrument panel. Replacement of the universal joint is required if any free motion or rust around the joint pivots is detected or if the joint fails inspection required by AD 2010-15-10.

What can I do if I cannot separate the shaft from the universal joint?

We can help! McFarlane offers a service to remove stuck shafts. Call for details.

U-Joint Taper Pin Removal Tool

Part number TOOL107

- Save time and money.
- Makes removal of stuck pins easy.
- Prevents damage from hammering behind the panel.
- Compact to get in tight places.
- Heat treated 4140 Alloy Steel.

Witness Hole Drill Fixture

Piper part number 766-585

A convenient tool for older universal joints that don't have a witness hole. Use to drill a witness hole in Piper universal joints per Piper service bulletin 1197C.

Saves time! Avoids disassembly of U-joint and shaft.

Stabilator Trim Kits for Piper Aircraft

Save time and money with convenient kits!

- Shafts and barrels manufactured by PMA Products, Inc.
- Bearing manufactured by Piper

Model	Part Number
PA28-140, 150, 151, 160, 161, 180, 181	PSTAB-KT-1
PA28-235, 236	PSTAB-KT-1
PA28-201T S/N 28-7921001 to 28-7921095	PSTAB-KT-1
PA28R-180, 200, 201, 201T	PSTAB-KT-1
PA32, PA32R	PSTAB-KT-1
PA34-200 S/N 34-7350185 and up	PSTAB-KT-2
PA34-200T, PA34-220T	PSTAB-KT-2
PSTAB-KT-1 Contains (1) CA65246-100 Trim Shaft (includes instructions and STC) (1) CA63530-100 Trim Barrel (includes instructions and STC) (2) 452-413 Bearing	
PSTAB-KT-2 Contains (1) CA65246-002 Trim Shaft (1) CA96596-002 Trim Barrel (2) 452-413 Bearing	

Note: Some trim barrels supplied by Piper were incorrectly manufactured and must be replaced. See Piper SB1251 or later revised service bulletin for more details. This service bulletin is not applicable to P/N CA63530-100 manufactured by PMA Products, Inc., however P/N CA63530-100 may be used to replace trim barrels affected by the service bulletin.

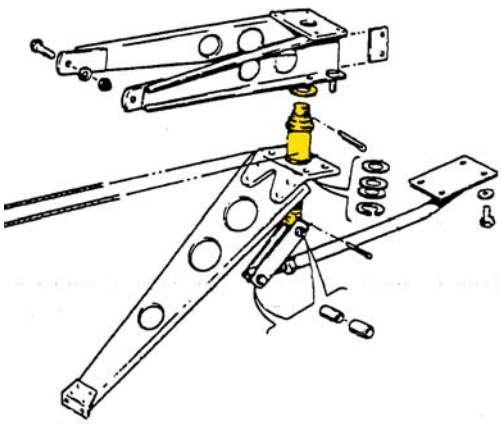

Maintenance Tip:
When replacing the stabilator trim barrel, it is normally a good time to also replace the stabilator trim cables. See pages 95-97 to find the correct cable(s) for your aircraft.

Coming Soon Cessna Trim Jack Actuator P/N MC1260074-1!

Trim Wheel Shafts and Sprockets for Cessna Aircraft

Improved Design!

Elevator trim shaft and sprocket for most 172 thru 185 and early 210 models.
Rudder trim sprocket for many 182, 205, 206, 207 models.
Aileron trim sprocket for Caravan 208 and 208B aircraft.

- Stainless Steel
- Heat treated shafts for extra strength
- Resists roll pin hole wear
- Roll pins in stock - P/N MS16562-25 (qty: 2 required per shaft)

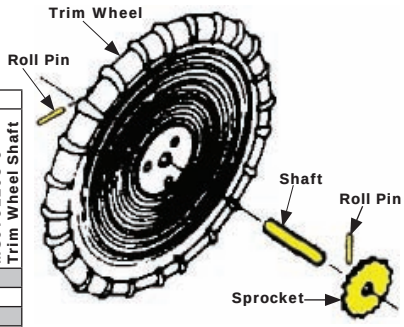

Aircraft Model	Serial Number	Part Number: MC0432134-1 Sprocket	MC0761210-1 Sprocket	MC0713656-3 Trim Wheel Shaft	MC0761205-2 Trim Wheel Shaft	MC0761205-9 Trim Wheel Shaft
120, 140, 140A	All	•				
150, 150A,B,C,D,E,F,G,H,J,K,L,M, A150K,L,M, F150F,G,H,J,K,L,M, FA150K,L,M	All	•				
152, A152, F152, FA152	All	•				
170, 170A,B	All	•				
172, 172A,B,C,D,E, F172D,E, FP172, P172	All	•				
172F,G,H,I,J,K,L,M,N,P,Q,R,S, 172RG, F172F,G,H,K,L,M,N,P, FR172E,F,G,H,J,K, R172E,F,G,H,K	All	•		•		
175, 175A,B,C	All	•				
177, 177A,B, 177RG, F177RG	All	•				
180, 180A,B,C,D,E,F,G,H	30000 thru 18051607		•		•	
180H,J,K	18051608 and On		•			•
182, 182A,B,C,D	All		•		•	
182E,F,G,H,J,K,L,M,N,P,Q,R,S,T	All	•	• [1]	•		
F182P,Q	All	•	• [1]			
FR182	All	•		•		
R182	R18200001 thru R18201798	•	• [1]	•		
	R18201799 and On	•		•		
T182	18267716 thru 18268055	•	• [1]	•		
	18268056 and On	•		•		
T182T	All	•	• [1]	•		
TR182	R18200584 thru R18201798	•	• [1]	•		
	R18201799 and On	•		•		
185, 185A,B,C,D,E, A185E	185-0001 thru 185-0949		•		•	
	185-0950 and On		•			•
A185F	18502091 thru 18502310		•			•
	18502311 and On					•
188, 188A,B, A188, A188A,B 188B (w/large hopper), T188C	All		•			
210-5 (205), 210-5A (205A)	All		• [1]			
206, 206H, T206H, U206, U206A,B,C,D,E,F,G, TU206A,B,C,D,E,F,G, P206, P206A,B,C,D,E, TP206A,B,C,D,E	All		• [1]			
207, 207A, T207, T207A	All		• [1]			
208B	208B0001 thru 208B1111		• [2]			
210, 210A	All	•			•	

Notes:
All eligibility shown is for elevator/stabilizer/stabilator trim system except where noted.
[1] Used in rudder trim system
[2] Used in aileron trim system

Save!

MC0713656-3

MC0761205-2

MC0761205-9

Trim Wheel Stop Catch Assembly for Cessna Aircraft

Save more than 75%

- FAA-PMA direct replacement
- Improved durable button for extended life
- 2 required per aircraft

Trim Wheel Catch Assemblies	
P/N	**Aircraft**
MC0713023-3	180, 180A,B,C,D,E,F
MC0713827-1	180G,H,J,K
MC0713023-3	182, 182A,B,C,D
MC0713023-3	185, 185A,B
MC0713827-1	185C,D,E, A185E,F

Longer Service Life!

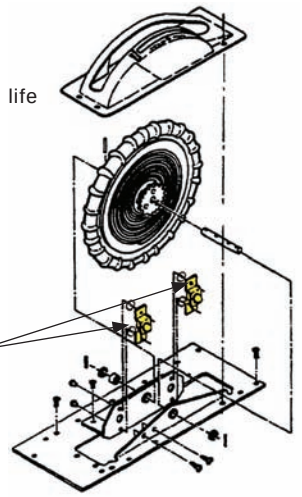

Maintenance Tip:
If you notice mild creep in the trim system this is often caused by worn out trim wheel stop catches. McFarlane offers improved stop catches at a fraction of the cost from the originals.

Stabilizer Jack Screw Pin Tool for Cessna 180, 182 and 185 Aircraft

P/N TOOL131

- For Cessna 180, 182, 185 jack screws
- Easily and safely remove and install your roll pin with the turn of a wrench
- No more damaging your jack screw by using a punch and hammer
- Manufactured with hardened stainless steel for increased tool life
- Works with both the original Cessna pin and the larger McFarlane pin

Avoid Costly Damage!

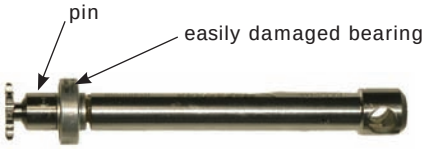

Stabilizer Jack Screw Actuator Kit for Cessna 180, 182 and 185 Aircraft

Improved Material for Extreme Corrosion Resistance
McFarlane replaces the original steel components with duplex stainless steel (even better than Monel) components for a long life even in a harsh saltwater environment.

Improved Bearing
Precision bearing reduces free play and features extra low temperature grease for easy turning at low temperatures.

Improved Strength and Reliability
The original Cessna actuators use a 3/32" roll pin to attach the sprockets and retaining collars to the screw bars. These pins are critical as the front of the stabilizer would detach from the airframe if they failed. Although the original roll pins are technically strong enough, the original design is marginal in strength. To provide a more robust design, McFarlane redesigned the sprocket and retaining collar to allow the use of a 5/32" roll pin. This more than doubles the strength of the design. The screw and barrel are match machined for a precision fit.

Convenient Kit
Stabilizer jack-screw kit P/N 1111 is an FAA-PMA/STC approved kit to replace all wear components for the stabilizer actuator assemblies for many Cessna 180, 180A-K, 182, 182A-D, 185, 185A-E, A185E-F aircraft. P/N 1111 includes all parts required to replace the following Cessna parts in both the left-hand and right-hand actuators:

- 0310332 Sprocket
- 0712500-11 Screw-Bar
- 0712500-13 Barrel
- 0712500-7 Collar-Retainer
- 0712502 Bushing Eccentric
- 0712500-10 Bushing
- MS20201KP6A or AN201KP6A Bearing
- NAS561-3-8 Roll Pin
- 0432138-3 or S2295-25-185 Chain
- 0712500-19 Plug

Replacement Components
P/N 1111 contains the following replacement components:

- 6361 Stainless Steel Roller Chain
- 6464 Connecting Link
- 6458 Eccentric Upper Bushing
- 6459 Lower Bushing
- 6460 Bearing
- 6461 Spring Pin (can only be used as a replacement with McFarlane P/N 1111)

Trim Actuator Boot and Clamp

New!

Now FAA-PMA approved and manufactured by McFarlane!
Boot P/N MC0712500-18 and Clamp P/N MC7137.

- Fits all 180, 180A-K, 182, 182A-D, 185, 185A-E, A185E-F aircraft.
- McFarlane recommends replacing the boot and clamp at the same time.
- High quality, flexible, durable, long life material

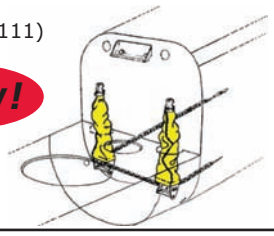

Maintenance Tip:
If the stabilizer is sluggish or jams, clean the barel and screw jack and re-apply a coating of MIL-PRF-23827 low temperature grease. Complete instructions can be found at www.mcfarlaneaviation.com/ICA

Pulleys and Pulley Kits for Cessna Aircraft

McFarlane stocks all pulleys required for Cessna single engine aircraft. Our MCS378 series pulleys replace the AN, NAS and S378 series pulleys commonly used on the Cessna aircraft. Pulley kits are available that contain all of the pulleys and cotter pins required for one aircraft.

Improved Bearings

All MCS378 series FAA-PMA pulleys used in McFarlane pulley kits feature high quality sealed precision ball bearings. This style of bearing is far superior to low grade, open seal bearings used in the cheapy Cessna S378-()L light duty series pulleys that they replace.

Available Pulley Part Numbers

1660433-1, 1660433-2, AN210-1B, AN210-2B, AN210-3B, AN210-4B, AN210-5B, AN220-1, AN220-2, AN220-3, AN220-4, MCS378-1, MCS378-2, MCS378-3, MCS378-4, MCS378-5, MS20219-1, MS20219-2, MS20219-3, MS20219-4, MS20219-5, MS20219A1, MS20219A2, MS20219A3, MS20219A4, MS20219A5 MS20220-1, MS20220-2, MS20220-3, MS20220-4, MS24566-1B, MS24566-2B, MS24566-3B, MS24566-4B, MS24566-5B, NAS383-1, NAS383-2, NAS383-3, NAS383-4, S1052-1, S1710-1, S378-4S, S394

McFarlane Pulley Oil, will not dry out and get sticky. See the following page.

Approved Replacements for Cessna Pulleys

Cessna Model/Series	Part Number*	Replaces Cessna Part Number*
120,140,140A,150,A150,A-A150, F150,FA150,FRA150,152,A152,F152,FA152,170,172,F172, FR172, 172RG,FP172,P172,R172,175,177,177RG,F17RG,180,182,A182,F182,FR182,R182, TR182,T182,185,A185,188, A188,A-A188,T188,205,206,P206,TU206,T206,TP206,U206,207, T207,208,210,P210,T210,T303,310,T310,320,335,336,337,F337,P337,FP-337,T337,O-2, 340,401,402,404,411,414,421,425,441,500,501	MCS378-1	S378-1 and S378-1L
	MCS378-2	S378-2, A124, AN210-2B and NAS383-2
	MCS378-3	S378-3, S378-3L, A130, AN210-3B ,BB-208 and NAS383-3
	MCS378-4	S378-4, A114, AN210-4B and NAS383-4
	MCS378-5	S378-5

*Replaces the listed Cessna part numbers in the specific aircraft illustrated parts catalogs. Installer must verify applicability prior to installation.

Available Cotter Pin Part Numbers

MS24665-132, MS24665-134, MS24665-138, MS24665-140, MS24665-143, MS24665-144, MS24665-155, MS24665-170, MS24665-24, MS24665-281, MS24665-283, MS24665-285, MS24665-287, MS24665-289, MS24665-292, MS24665-295, MS24665-353, MS24665-355, MS24665-357, MS24665-360, MS24665-5, MS24665-7, MS24665-71.

Pulleys and cotter pins available as convenient kits. Pulleys can be purchased separately. Cotter Pins can be purchased in quantities of 10 or 25 each depending on part number.

			Quantity per Kit (Applicable cotter pins also included)						
Model	Serial Number	Kit P/N	MCS378-1	MCS378-2	MCS378-3	MCS378-4	MCS378-5	S394	Other Pulleys
120/140	8000-15075	PULL-KT-01	8	2	10	10		1	
140A	15200-15724	PULL-KT-02		2	8	12		1	(8) NAS383-1
150	17001-59018	PULL-KT-03	8	13	10	12		3	
150A,B,C	15059019-15060087	PULL-KT-04	8	13	10	10		3	
150D,E[1]	15060088-15061083	PULL-KT-05	8	13	10	4		1	(6) MS20220-2
150E[1]	15061084-15061532	PULL-KT-06	8	13	10	4			(6) MS20220-2
150F,G	15061533-15067198	PULL-KT-07	10	10	13	4			(7) MS20220-2
150H	15067199-15069308	PULL-KT-08	14	10	13	4			(7) MS20220-2
150J	15069309-15071128	PULL-KT-09	14	8	13	4			(7) MS20220-2
150K,L[1]	15071129-15074399	PULL-KT-10	14	8	13	4			(7) MS20220-2
A150K,L[1]	A15000001-A1500387	PULL-KT-10	14	8	13	4			(7) MS20220-2
F150K,L[1]	F15000530-F15000943	PULL-KT-10	14	8	13	4			(7) MS20220-2
FA150K,L	FA1500001-FA1500120	PULL-KT-10	14	8	13	4			(7) MS20220-2
FRA150L[1]	FRA1500121-FRA1500211	PULL-KT-10	14	8	13	4			(7) MS20220-2
150L[1]	15074400-15074661	PULL-KT-11	14	10	11	4			(7) MS20220-2
A150L[1]	A1500388-A1500415	PULL-KT-11	14	10	11	4			(7) MS20220-2
F150L[1]	F1500944-F15001062	PULL-KT-11	14	10	11	4			(7) MS20220-2
150L[1],M	15074662-15079405	PULL-KT-12	14	10	12	4			(7) MS20220-2
FRA150L[1]M	FRA1500212-FRA1500336	PULL-KT-12	14	10	12	4			(7) MS20220-2
152	15279406-15286033	PULL-KT-13	14	10	12	4			(7) MS20220-2
A152	A1520735-A1521049	PULL-KT-13	14	10	12	4			(7) MS20220-2
F152	F15201429-F015201952	PULL-KT-13	14	10	12	4			(7) MS20220-2
FA152	FA1520337-FA1520387	PULL-KT-13	14	10	12	4			(7) MS20220-2
170	18000-18729	PULL-KT-14		4	7	16		2	(8) NAS383-1
170A	18730-20266	PULL-KT-15			13	14			(8) NAS383-1
170B	20267-27169	PULL-KT-16	8	11	9	22		4	(8) NAS383-1
172A,B,C	28000-17249544	PULL-KT-17	8	11	10	18		4	
172D	17249545-17250572	PULL-KT-18	9	11	10	18		4	
F172D	F1720001-F1720018	PULL-KT-18	9	11	10	18		4	
FP172	FP1720001-FP1720003	PULL-KT-18	9	11	10	18		4	
P172	P17257120-P17257188	PULL-KT-18	9	11	10	18		4	
172E	17250573-17251822	PULL-KT-19	9	11	10	16		4	
F172E	F1720019-F1720085	PULL-KT-19	9	11	10	16		4	
172F,G,H,I,K,L,M[1]	17251823-17263458	PULL-KT-20	13	2	10	16		3	(2) MS20220-1
F172F,G,H,K,L,M[1]	F1720086-F17201234	PULL-KT-20	13	2	10	16		3	(2) MS20220-1
FR172E,F,G,H,J	FR1720001-FR1720590	PULL-KT-21	12	2	10	16		3	(2) MS20220-1
172M[1],N,P	17263459-17276673	PULL-KT-22	13	2	10	16		3	(2) MS20220-1, (1) S1710-1
F172M[1],N,P	F17201235-F17202254	PULL-KT-22	13	2	10	16		3	(2) MS20220-1, (1) S1710-1
172R,S	17280001 & On	PULL-KT-19	9	11	10	16		4	
175A,B,C	55001-17557119	PULL-KT-17	8	11	10	18		4	
180A,B	30000-50661	PULL-KT-24	5	11	7	20		4	
180C,D,E	50662-18051183	PULL-KT-25	5	12	7	20		4	
180F,G	18051184-18051445	PULL-KT-26	5	12	7	20		4	(1) MS20220-2
180H[1]	18051446-18051607	PULL-KT-27	5	12	7	22		4	(1) MS20220-2
	18051608-18052206	PULL-KT-28	5	12	7	22	1	8	(1) MS20220-2
180H[1],J[1]	18052207-18052384	PULL-KT-83	5	12	7	22	1	8	(1) MS20220-2, (1) S1710-1
180J[1],K	18052385-18053203	PULL-KT-29	5	11	7	22	1	8	(2) MS20220-2, (1) S1710-1
182,A,B	33000-52358	PULL-KT-34	5	11	7	20	1	4	
182C,D	52359-18053598	PULL-KT-35	5	12	7	20	1	4	
182E[1]	18253599-18253929	PULL-KT-36	6	1	6	10		3	(6) MS20220-2, (1) S1052-1
182E[1],F,G,H,J,K	18253930-18258505	PULL-KT-85	11	3	6	10		3	(6) MS20220-2, (1) S1052-1

[1] Partial model eligibility

Eligibility continues on next page

Flight Control System
Pulleys for Cessna Aircraft

Continued from previous page			Quantity per Kit (Applicable cotter pins also included)						
Model	Serial Number	Kit P/N	MCS378-1	MCS378-2	MCS378-3	MCS378-4	MCS378-5	S394	Other Pulleys
182L,M,N[1]	18258506-18260445	PULL-KT-37	6	3	6	8		3	(8) MS20220-2, (1) S1052-1
182N[1]	18260446-18260669	PULL-KT-38	8	3	6	8		3	(8) MS20220-2, (1) S1052-1
182N[1],P[1]	18260670-18262465	PULL-KT-86	8	3	6	8		3	(8) MS20220-2, (1) S1052-1, (1) S1710-1
182P[1],Q,R	18262466-18268615	PULL-KT-39	13	3	6	8		3	(8) MS20220-2, (1) S1052-1, (1) S1710-1
T182	18267716-18268615	PULL-KT-39	13	3	6	8		3	(8) MS20220-2, (1) S1052-1, (1) S1710-1
182S, 182T	18208001 & On	PULL-KT-80	13	3	6	8		3	(9) MS20220-2, (1) S1052-1, (1) S1710-1
F182P,Q	F18200001-F18200169	PULL-KT-39	13	3	6	8		3	(8) MS20220-2, (1) S1052-1, (1) S1710-1
FR182	FR18200001-FR18200070	PULL-KT-40	3	1	16	16		3	(8) MS20220-2, (1) S1052-1, (1) S1710-1
R182,TR182	R18200001-R18202041	PULL-KT-40	3	1	16	16		3	(8) MS20220-2, (1) S1052-1, (1) S1710-1
T182	T1820801 & On	PULL-KT-80	13	3	6	8		3	(9) MS20220-2, (1) S1052-1, (1) S1710-1
185,A,B,C	1850001-1850776	PULL-KT-30	5	12	7	20	1	4	(1) MS20220-2
185D	1850777-1850967	PULL-KT-31	5	12	7	22	1	4	(1) MS20220-2
185E,A185E[1]	1850968-18501901	PULL-KT-32	5	12	7	22	1	8	(1) MS20220-2
A185E[1],F[1]	18501902-18502310	PULL-KT-84	5	12	7	22	1	8	(1) MS20220-2, (1) S1710-1
A185F[1]	18502311-18504448	PULL-KT-33	5	11	7	22	1	8	(2) MS20220-2, (1) S1710-1
188[1],A188[1]	1880001-1880317	PULL-KT-41	2	5		6		4	(4) 1660433-1, (8) MS20220-1, (2) MS20220-2, (1) MS20220-4
	1880318-1880572	PULL-KT-42	4	5		6		4	(4) 1660433-1, (8) MS20220-1, (2) MS20220-2, (1) MS20220-4
188A[1],A188A[1]	1880573-1880707	PULL-KT-43	4	5		6		6	(4) 1660433-1, (8) MS20220-1, (2) MS20220-2, (1) MS20220-4, (1) S1052-1
188A[1],B[1], A188A[1],B[1]	1880708-18801348 18800967T-188001348T	PULL-KT-44	4	5		6		6	(4) 1660433-2, (10) MS20220-2, (1) MS20220-4, (2) S1052-1
188B[1],A188B[1]	18801349-18801402 18801349T-18801402T	PULL-KT-45	4	5		6		6	(4) 1660433-2, (1) MS20220-1, (10) MS20220-2, (1) MS20220-4, (2) S1052-1
	18801403-18803856 18801403T-18803968T	PULL-KT-46	4	5		6		6	(4) 1660433-2, (1) MS20220-1, (10) MS20220-2, (1) MS20220-4, (2) S1052-1, (1) S1710-1
T188C	T18803297T-T18803968T	PULL-KT-6	4	5		6		6	(4) 1660433-2, (1) MS20220-1, (10) MS20220-2, (1) MS20220-4, (2) S1052-1, (1) S1710-1
210-5 (205), 210-5A (205A)	2050001-2050577	PULL-KT-47	11	3	6	22		3	(5) MS20220-2, (1) S1052-1
206,U206,A,B	2060001-U2060914	PULL-KT-48	7	4	6	26		6	(4) MS20220-1, (9) MS20220-2, (1) S1052-1
TU206A,B	2060438-U2060914	PULL-KT-48	7	4	6	26		6	(4) MS20220-1, (9) MS20220-2, (1) S1052-1
P206,TP206A,B	P2060001-P2060419	PULL-KT-48	7	4	6	26		6	(4) MS20220-1, (9) MS20220-2, (1) S1052-1
U206,TU206C,D,E[1]	U2060915-U20601667	PULL-KT-49	10	4	6	26		6	(4) MS20220-1, (11) MS20220-2, (1) S1052-1
P206,TP206C,D,E	P2060420-P2060647	PULL-KT-49	10	4	6	26		6	(4) MS20220-1, (11) MS20220-2, (1) S1052-1
U206E[1],TU206E[1]	U20601668-U20601700	PULL-KT-50	10	4	6	26		6	(4) MS20220-1, (9) MS20220-2, (1) S1052-1, (1) S1710-1
U206F[1],TU206F[1]	U20601701-U20601874	PULL-KT-51	8	4	6	26		6	(4) MS20220-1, (11) MS20220-2, (1) S1052-1, (1) S1710-1
	U20601875-U20602199	PULL-KT-52	7	4	6	26		6	(4) MS20220-1, (11) MS20220-2, (1) S1052-1, (1) S1710-1
	U20602200-U20602579	PULL-KT-53	7	2	6	26		6	(4) MS20220-1, (9) MS20220-2, (2) MS20220-4, (1) S1052-1, (1) S1710-1
U206F[1],G[1] TU206F[1],G[1]	U20602580-U20603798	PULL-KT-54	7	1	6	20		6	(4) MS20220-1, (9) MS20220-2, (2) MS20220-4, (1) S1052-1, (1) S1710-1
U206G[1],TU206G[1]	U20603799-U20607020	PULL-KT-55	7		6	22		6	(4) MS20220-1, (8) MS20220-2, (2) MS20220-4, (1) S1052-1, (1) S1710-1
206H	20608001 & On	PULL-KT-56	7		6	18		4	(4) MS20220-1, (8) MS20220-2, (2) MS20220-4, (1) S1052-1, (1) S1710-1
T206H	T20608001 & On	PULL-KT-56	7		6	18		4	(4) MS20220-1, (8) MS20220-2, (2) MS20220-4, (1) S1052-1, (1) S1710-1
207[1],T207[1]	20700001-20700204	PULL-KT-57	12	1	4	21		6	(4) MS20220-1, (11) MS20220-2, (7) S1052-1, (2) S1710-1
	20700205-20700227	PULL-KT-58	12	1	4	21		6	(4) MS20220-1, (11) MS20220-2, (7) S1052-1, (3) S1710-1
	20700228-20700267	PULL-KT-59	9	1	4	21		6	(4) MS20220-1, (9) MS20220-2, (7) S1052-1, (3) S1710-1
207[1],207A[1]	20700268-20700390	PULL-KT-60	9	1	6	15		6	(4) MS20220-1, (9) MS20220-2, (2) MS20220-4, (5) S1052-1, (3) S1710-1
T207[1],T207A[1]	20700391-20700788	PULL-KT-61	9	1	6	17		6	(4) MS20220-1, (8) MS20220-2, (2) MS20220-4, (5) S1052-1, (3) S1710-1
208[1]	20800001 thru 20800145	PULL-KT-87		3		13			(6) MS20220-1, (2) MS20220-3, (18) S378-4S
	20800146 thru 20899999	PULL-KT-88		2		13			(6) MS20220-1, (2) MS20220-3, (18) S378-4S
208B	All	PULL-KT-89		2	1	13			(6) MS20220-1, (2) MS20220-3, (19) S378-4S
210,A	57001-21057840	PULL-KT-62	5	4	11	22		3	(9) MS20220-2, (2) S1052-1
210B,C	21057841-21058220	PULL-KT-63	7	4	6	28		3	(4) MS20220-2, (2) S1052-1
210D,E,F	21058221-21058818	PULL-KT-64	7	3	6	28		6	(4) MS20220-1, (9) MS20220-2, (1) S1052-1
T210F	T2100001-T2100197	PULL-KT-64	7	3	6	28		6	(4) MS20220-1, (9) MS20220-2, (1) S1052-1
210G	21058819-21058936	PULL-KT-65	7		6	28		2	(12) MS20220-2, (2) MS20220-3, (8) S1710-1
T210G	T2100198-T2100307	PULL-KT-65	7		6	28		2	(12) MS20220-2, (2) MS20220-3, (8) S1710-1
210H[1]	21058937-210859030	PULL-KT-66	11		6	28		2	(12) MS20220-2, (2) MS20220-3, (8) S1710-1
	21059031-21059061	PULL-KT-67	11		6	28		2	(11) MS20220-2, (2) MS20220-3, (4) S1710-1
T210H[1]	T2100308-T2100378	PULL-KT-66	11		6	28		2	(12) MS20220-2, (2) MS20220-3, (8) S1710-1
	T2100379-T2100392	PULL-KT-67	11		6	28		2	(11) MS20220-2, (2) MS20220-3, (4) S1710-1
210J	21059062-21059199	PULL-KT-68	15		6	28		2	(11) MS20220-2, (2) MS20220-3, (4) S1710-1
T210J	T2100393-T2100454	PULL-KT-68	15		6	28		2	(11) MS20220-2, (2) MS20220-3, (4) S1710-1
210K,L[1]	21059200-21060089	PULL-KT-69	14	1	7	26		2	(11) MS20220-2, (2) MS20220-3, (4) S1710-1
210L[1],M,N[1]	21060090-21064135	PULL-KT-71	12	1	7	28		2	(11) MS20220-2, (2) MS20220-3, (4) S1710-1
210N[1],T210N[1]	21064136-21064897	PULL-KT-77	12	1	7	28		2	(11) MS20220-2, (6) MS20220-3, (5) S1710-1
210R,T210R	21064898-21065009	PULL-KT-78	8		7	28		2	(9) MS20220-2, (4) MS20220-3, (5) S1710-1
P210N	P21000001-P21000834	PULL-KT-81	12	1	7	28		2	(11) MS20220-2, (2) MS20220-3, (5) S1710-1
P210R	P21000835-P21000874	PULL-KT-82	8		7	28		2	(9) MS20220-2, (4) MS20220-3, (5) S1710-1

[1] Partial model eligibility

McFarlane Aircraft Pulley Oil

- Does not dry out and get sticky
- Loosens old stiff pulley grease
- Save the labor of re-oiling the control system every year!

Convenient Kits

Qty	Description
PULLEY OIL KT	
1	Pint Can of Pulley Oil
1	Needle Oiler with Oil
1	4.5" Oil Extension
1	8" Oil Extension
PULLEY OILER KT	
1	Needle Oiler with Oil
1	4.5" Oil Extension
1	8" Oil Extension
PULLEY OIL	
1	Pint Can of Pulley Oil